Frigidaire

RAILWAY AIR CONDITIONING PARTS CATALOG

INSTRUCTIONS for ORDERING CATALOG PARTS

When ordering replacement parts, use piece numbers, specify the quantity, and give a complete description.

It is important that the consignee's name be typewritten or printed on the order.

TELEGRAM ORDERS

If it is necessary to order any parts by telegram, the charges must be prepaid, otherwise the telegram will not be accepted.

CLAIMS FOR LOSS OR DAMAGE IN TRANSIT

We are not liable for damage to goods in transit. Any claims of this nature should be filed against the transportation company from which the shipment is received.

SHORTAGES OR ERRORS

Any shortages or errors in shipment should be brought to our attention immediately giving the order number and the bill of lading or express receipt number.

Copyright 1948 by
(1684)
Frigidaire Division
General Motors Corporation

SER 504 2M 9-48

Litho in U.S.A.

PROCEDURE for SELECTING PARTS

When selecting replacement parts, it is necessary to identify the correct EM Model number and the type of unit for which the parts are being ordered. If this cannot be determined from the serial or name plate, the Ordering Section should refer to the Installation Records which are furnished to each respective railroad and designates the type of equipment being used.

After the EM Model has been identified, turn to the proper section in which the unit is illustrated.

EXAMPLE: EM-15529 COMPRESSOR MOTOR UNIT - SECTION I
EM-16020 CONDENSER UNIT - SECTION II
EM-15685 AIR CONDITIONING UNIT - SECTION III

To provide a simplified method for identifying the piece numbers of replacement parts, we have included an illustration of the actual or typical unit in each section of this catalog. The various parts of the units are indicated by numerals and the descriptions of the numerals are listed on the illustration.

By selecting the illustration number from the photograph, the piece number of the part desired can be located in the parts information directly following each illustration.

The necessary parts for mounting any given item are listed in the parts information directly under the part to be mounted. When an assembly part is shown on the illustration, the assembly piece number is listed in the parts information and also the detail parts are shown, if replaceable, and are indented under the assembly piece number. The quantity of parts used per unit is also shown.

When ordering Electrical Equipment or Motor replacement parts, the same procedure should be followed. Identify the type Panel, Relay, Resistor, Motor, etc., then refer to the proper section for selecting the parts desired.

Parts not illustrated appear at the end of the regular piece number listings and are classified Parts Not Illustrated.

TABLE OF CONTENTS

SECTION I . . . . . COMPRESSOR MOTOR UNITS

SECTION II . . . . . CONDENSER UNITS

SECTION III . . . . . AIR CONDITIONING UNITS

SECTION IV . . . . . MISCELLANEOUS ACCESSORIES

SECTION V . . . . . MOTORS

SECTION VI . . . . . ELECTRICAL EQUIPMENT

Section I

COMPRESSOR

MOTOR UNITS

EM-18829

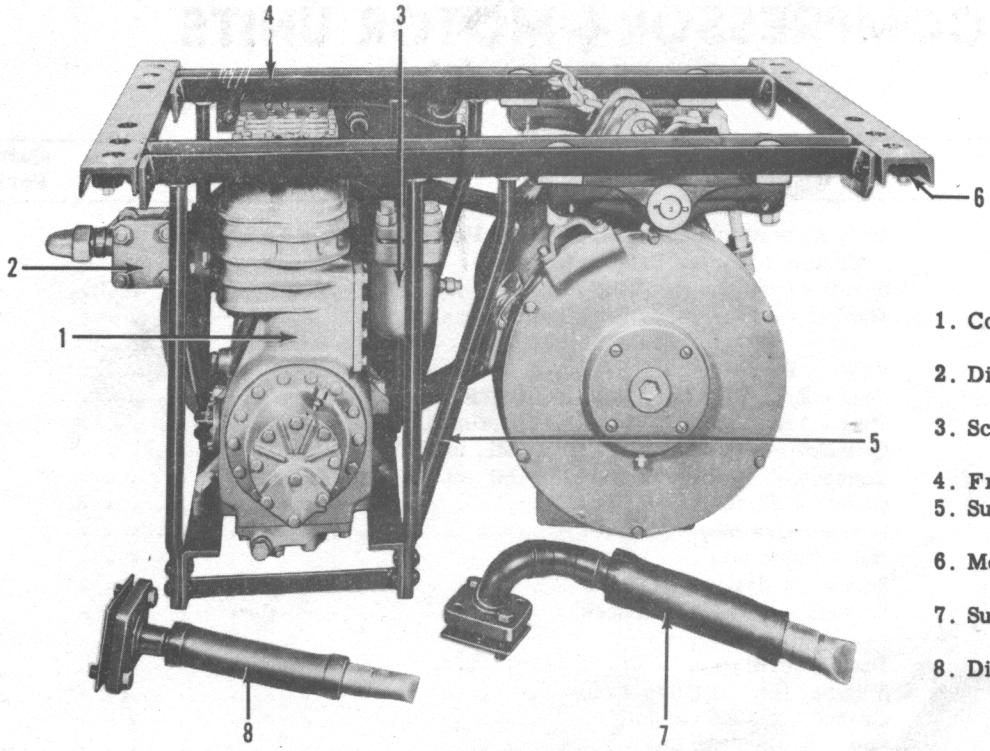

1. Compressor Body and Mtg. Parts
2. Discharge Valve and Mtg. Parts
3. Scale Trap and Mtg. Parts
4. Frame Assembly
5. Support and Rod Assem. and Mtg. Parts
6. Mounting Assembly and Parts
7. Suction Connection and Mtg. Parts
8. Discharge Connection and Mtg. Parts

Typical Compressor-Motor Unit (Rear View)

9. Motor Hanger Bracket and Mtg. Parts
10. Screw Spacer Assem.
11. Safety Chain
12. Belt Adjusting Rod and Mtg. Parts
13. Suction Valve and Mtg. Parts
14. Flywheel
15. Belt
16. Pulley
17. Motor and Mtg. Parts
18. Switch and Gauge Mtg. Bracket
19. Gauge and Valve Shield
20. High Pressure Gauge
21. Low Pressure Gauge
22. Packless Valve and Parts
23. Valve Manifold
24. YL Switch and Parts
25. Belt Guard

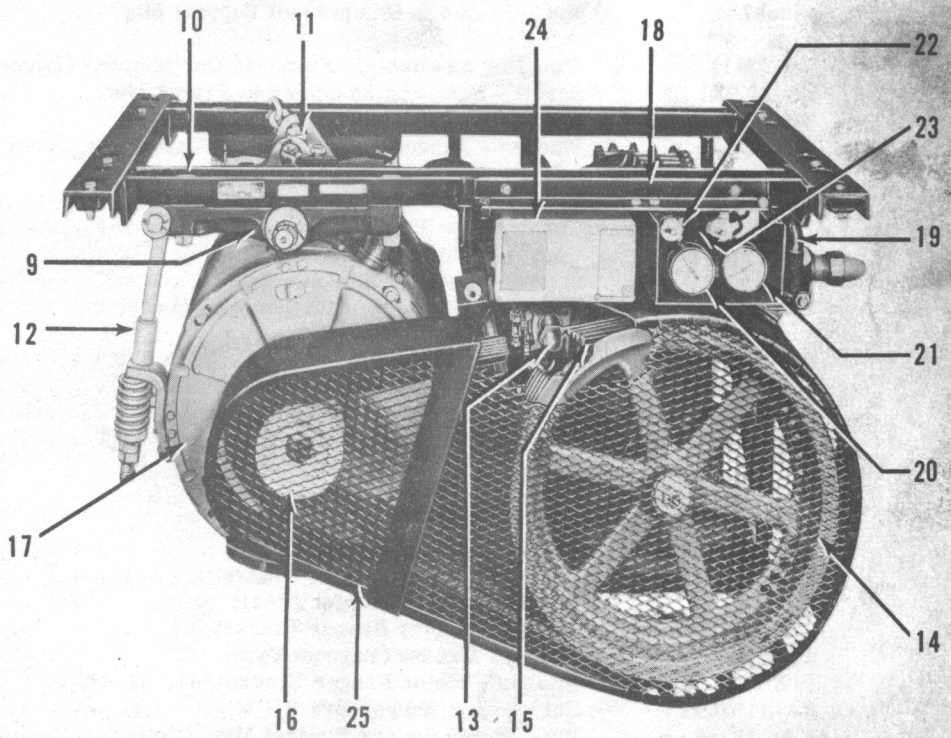

Typical Compressor-Motor Unit (Front View)

EM-18829

COMPRESSOR--MOTOR UNITS
Parts Information

Illus. No.	Piece No.	Description	Quantity Per Unit
1	1133707	Body Assembly - Compressor (For Parts See Pages 5, 6, 7, 8, Section I Master Catalog SER-504)	1
	642545	Screw - Compressor Body Mtg.	4
	642540	Washer - Compressor Body Mtg. (Lock)	4
2	1136289	Valve - Discharge	1
	96287	Plug - 1/4" Pipe (Mt. in Valve) (Optional)	1
	642548	Plug - 1/8" Pipe (Mt. in Valve) (Optional)	1
	613540	Connector - 1/4" P. x 1/4" Fl. (Mt. in Valve) (Optional)	1
	615812	Connector - 1/8" P. x 1/4" Fl. (Mt. in Valve) (Optional)	1
	640052	Gasket - Valve Mtg.	1
	EA-117473	Stud - Valve Mtg.	2
	640055	Nut - Valve Mtg.	2
	EA-118061	Screw - Valve Mtg.	2
	EA-75598	Washer - Valve Mtg. (Lock)	4
3	EB-24542	Trap - Scale	1
	1149161	Strainer (Mt. in Scale Trap)	1
	640052	Gasket - Scale Trap Mtg.	1
	EA-117473	Stud - Scale Trap Mtg.	4
	EA-75598	Washer - Scale Trap Mtg. (Lock)	4
	640055	Nut - Scale Trap Mtg.	4
4	ED-35114	Frame Assembly - Compressor and Motor	1
5	ED-18263	Support and Rod Assembly - Compressor	1
	642536	Spacer - Frame to Compressor Support Mtg.	6
	642537	Nut - Frame to Compressor Support Mtg.	6
6	EB-73414	Mounting Assembly - Frame to Car Member (Rubber)	4
	EA-132845	Screw - Mounting Assembly to Frame Mtg.	8
	EA-133368	Nut - Mounting Assembly to Frame Mtg.	8
	EA-133005	Washer - Mounting Assembly to Frame Mtg. (Lock)	8
7	EB-73909	Connection Assembly - Suction (1 5/8")	1
	EB-72260	Connection - Flexible	1
	640052	Gasket - Suction Connection Mtg.	1
	636096	Screw - Suction Connection Mtg.	4
	EA-75598	Washer - Suction Connection Mtg. (Lock)	4
8	EB-73897	Connection Assembly - Discharge (1 1/8")	1
	EB-72261	Connection - Flexible	1
	640052	Gasket - Discharge Connection Mtg.	1
	640335	Screw - Discharge Connection Mtg.	4
	EA-75598	Washer - Discharge Connection Mtg.	4
	640055	Nut - Discharge Connection Mtg.	4
9	EC-28504	Bracket - Motor Hanger (Front)	1
	EA-112254	Bearing - Motor Hanger Bracket	1
	EC-28503	Bracket - Motor Hanger (Rear)	1
	EA-112254	Bearing - Motor Hanger Bracket	1
	1149194	Fitting - Grease (Bayonet Type)	3
	642540	Washer - Motor Hanger Bracket Mtg. (Lock)	4
	EA-112240	Nut - Motor Hanger Bracket Mtg.	4
	EA-112244	Pin - Motor Hanger Bracket Mtg. (Cotter)	4
10	EB-72286	Screw Spacer Assembly (Front)	1
	EB-72324	Screw Spacer Assembly (Rear)	1

(Continued on next page)

EM-18829
COMPRESSOR - MOTOR UNIT

Illus. No.	Piece No.	Description	Quantity Per Unit
11	EB-72318	Chain - Safety	1
	EA-132640	Shackle Assembly - Chain	4
	92952	Pin (Cotter) (Mt. in Shackle Assembly)	4
12	EB-74473	Rod - Belt Adjusting	1
	EA-112248	Nut - Motor Adjusting	1
	EA-112264	Washer - Rod to Hanger Bracket Mtg. (Lock)	1
	EA-112245	Pin - Rod to Hanger Bracket Mtg. (Cotter)	1
	EA-137534	Guide - Belt Adjusting Spring	1
	EA-137533	Spring - Belt Adjusting	1
13	1136289	Valve Assembly - Suction	1
	96287	Plug - 1/4" Pipe (Mt. in Valve) (Optional)	1
	642548	Plug - 1/8" Pipe (Mt. in Valve) (Optional)	1
	97060	Tee - 1/4" Fl. x 1/4" P. x 1/4" Fl. (Mt. in Valve)	1
	98959	Deadhead - 1/4" Fl. (Mt. on Tee)	1
	613539	Nut - 1/4" Flare (Mt. on Tee)	1
	640052	Gasket - Valve Mtg.	4
	640054	Screw - Valve Mtg.	4
	EA-75598	Washer - Valve Mtg. (Lock)	4
14	ED-34518	Flywheel - Compressor	1
	640082	Washer - Flywheel Mtg. (Plain)	1
	635941	Nut - Flywheel Mtg.	1
	617078	Pin - Flywheel Mtg. (Cotter)	1
15		Belt - Compressor Drive (Optional) (See Optional Parts -- Page 4-23)	6
16		Pulley - Motor (Optional) (See Optional Parts -- Page 4-23)	1
	EA-78191	Screw - Motor Pulley (Set)	2
17		Motor - Compressor (Optional) (See Optional Parts -- Page 4-23)	1
	1149194	Fitting - Grease (Bayonet Type)	3
	EA-112255	Screw - Motor Pivot Shaft to Motor Bracket (Set)	2
	EA-112253	Washer (Mt. on Ends of Shaft)	2
	EA-112245	Pin (Mt. on Ends of Shaft) (3/16" Cotter)	2
	EA-112247	Nut (Mt. on End of Shaft)	1
	EA-112243	Pin (Mt. on End of Shaft) (1/8" Cotter)	1
18	EB-73904	Bracket Assembly - Switch and Gauge Unit Mtg.	1
	EA-133367	Screw - Bracket to Frame Mtg.	2
	EA-133005	Washer - Bracket to Frame Mtg. (Lock)	2
19	EC-48818	Shield - Gauge and Valve	1
	EA-134546	Screw - Shield Mtg.	2
	EA-133006	Washer - Shield Mtg. (Lock)	2
	EA-133146	Nut - Shield Mtg.	2
20	1149162	Gauge - High Pressure	1
21	1149163	Gauge - Low Pressure	1
	EA-136578	Elbow - Gauge Connection	2
	5444111	Adapter - Manifold to High-Low Pressure Lines	2
	616435	Elbow - Manifold to High-Low Pressure Lines	2
22	1133582	Valve - Packless	2
	1133580	Needle, Bellows and Stem Assembly	2
	636238	Nut - Valve Body Clamp	2

(Continued on next page)

EM-18829
COMPRESSOR - MOTOR UNIT

Illus. No.	Piece No.	Description	Quantity Per Unit
23	EB-73967	Manifold - Valve Mtg.	1
	EA-133149	Screw - Manifold to Bracket Mtg.	2
	EA-133006	Washer - Manifold to Bracket Mtg. (Lock)	2
	EA-133146	Nut - Manifold to Bracket Mtg.	2
24	5850848	Switch Assembly (YL-LOH)	1
	EM-14630	Cutout Assembly - High-Low Pressure	1
	5401551	Switch - Safety	1
	5853233	Connector - Lead to Case	1
	5853234	Lead Assembly - Switch	1
	EA-133031	Screw - Switch Mtg.	2
	EA-133006	Washer - Switch Mtg. (Lock)	2
	EA-133146	Nut - Switch Mtg.	2
25	EC-49561	Guard Assembly - Belt	1
	EA-133368	Nut - Belt Guard Mtg. (Upper)	2
	EA-134628	Washer - Belt Guard Mtg. (Upper) (Plain)	2
	EA-133005	Washer - Belt Guard Mtg. (Upper) (Lock)	2
	EA-132845	Screw - Belt Guard Mtg. (Lower)	2
	EA-134628	Washer - Belt Guard Mtg. (Lower) (Plain)	2
	EA-133005	Washer - Belt Guard Mtg. (Lower) (Lock)	2

PARTS NOT ILLUSTRATED

	Spacer - Mounting (Optional)	8
	Screw - Spacer Mtg. (Optional) (See Optional Parts Below)	8
EA-49547	Washer - Spacer Mtg.	8
EA-118058	Nut - Spacer Mtg.	8

OPTIONAL PARTS

BELTS

634097	Belt - Compressor Drive (82")	6
633825	Belt - Compressor Drive (84")	6

PULLEY

EC-27764	Pulley (4 5/8" O.D.)	1
EC-21942	Pulley (5" O.D.)	1
EC-24766	Pulley (5 5/8" O.D.)	1
EC-24765	Pulley (6" O.D.)	1
EC-47390	Pulley (6 3/4" O.D.)	1

SPACER

EA-49517	Spacer - Mounting (9/16" Clearance)	8
EA-134257	Screw - Spacer Mounting (5/8"-11 x 3 1/2")	8
EA-71717	Spacer - Mounting (1 1/8" Clearance)	8
EA-118057	Screw - Spacer Mounting (5/8"-11 x 4")	8

MOTOR

A-8130	Motor - 12 - 7 1/2 H.P., 72 Volt DC (Roller Bearing) (Same as A-7162 except use 5388935 All Weather Cover Band)	1

SEE SECTION 5 MASTER CATALOG (SER-504) FOR MOTOR REPLACEMENT PARTS.

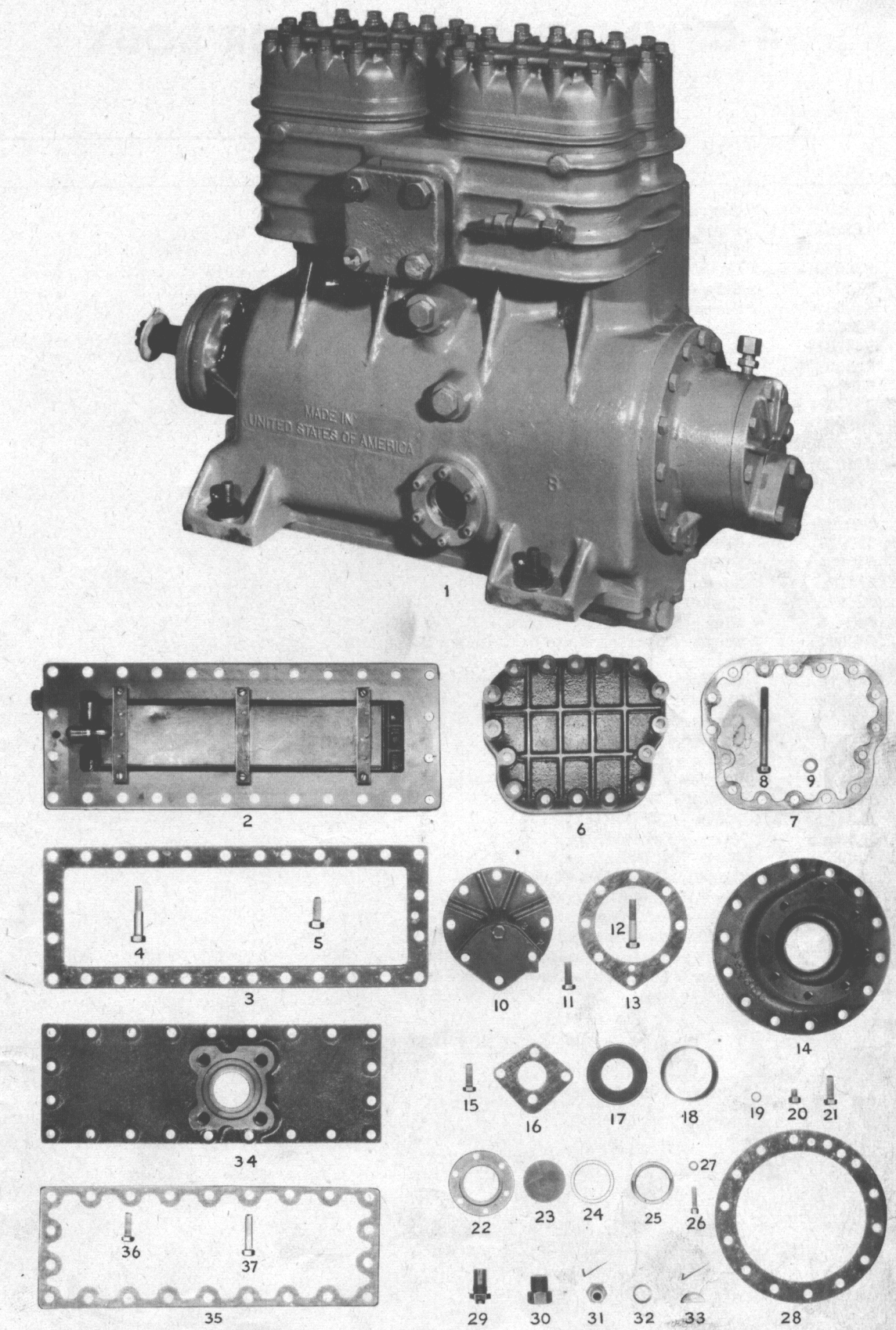

4 Cylinder Compressor Body (Exterior Parts)

4 CYLINDER COMPRESSOR BODY
Exterior Parts

Illus. No.	Piece No.	Description	Quantity Per Unit
1	1133707	Body Assem. - Compressor	1
2	1133625	Plate Assem. - Bottom	1
	1133617	Filter Assem. - Oil	1
3	636590	Gasket - Bottom Plate	1
4	640049	Screw - Bottom Plate Mtg. (7/16 in. - 20 x 2 1/4 in.)	2
5	640059	Screw - Bottom Plate Mtg. (7/16 in. - 20 x 1 1/8 in.)	26
6	636076	Head - Cylinder	2
7	5445011	Gasket - Cylinder Head	2
8	636057	Screw - Cylinder Head Mtg.	32
9	636046	Washer - Cylinder Head Mtg.	32
10	EB-43771	Pump Assem. - Oil	1
11	640047	Screw - Oil Pump Plate Mtg.	5
12	640709	Screw - Oil Pump Mtg.	3
13	636339	Gasket - Oil Pump Mtg.	1
14	1133616	Plate Assem. - Bearing	1
	636340	Bearing - Plate Assem.	1
15	640047	Screw - Oil Pump Mtg. (3/8 in. - 24 x 1 1/16 in.)	1
16	635939	Gasket - Oil Pump Plate	1
17	640121	Plate - Spring Pressure	1
18	640122	Spring - Oil Pump Pressure	1
19	625939	Gasket - Screw Plug	1
20	640479	Plug - Screw	1
21	640047	Screw - Bearing Plate to Cylinder Block Mtg.	14
22	640475	Retainer - Sight Glass	1
23	640476	Gasket - Sight Glass (Rubber)	1
24	636263	Sight Glass	1
	1149271	Cover - Sight Glass	1
25	640477	Gasket - Sight Glass (Lead)	1
26	640474	Screw - Sight Glass Mtg.	6
27	625932	Washer - Sight Glass Mtg. (Lock)	6
28	640096	Gasket - Bearing Plate	1
29	1133760	Valve - Oil Relief	1
30	1133483	Valve - Oil Return	1
31	624353	Plug - Oil Drain	1
32	624357	Gasket - Oil Drain Plug	1
33	613512	Key - Woodruff (Flywheel Mtg.)	1
34	636368	Plate - Suction Manifold Cover	1
35	636362	Gasket - Suction Manifold Cover Plate	1
36	640047	Screw - Suction Manifold Cover Plate Mtg. (3/8 in. - 24 x 1 1/16 in.)	20
37	636356	Screw - Suction Manifold Cover Plate Mtg. (3/8 in. - 24 x 1 3/4 in.)	2

PARTS NOT ILLUSTRATED

	1149271	Cover - Sight Glass	1

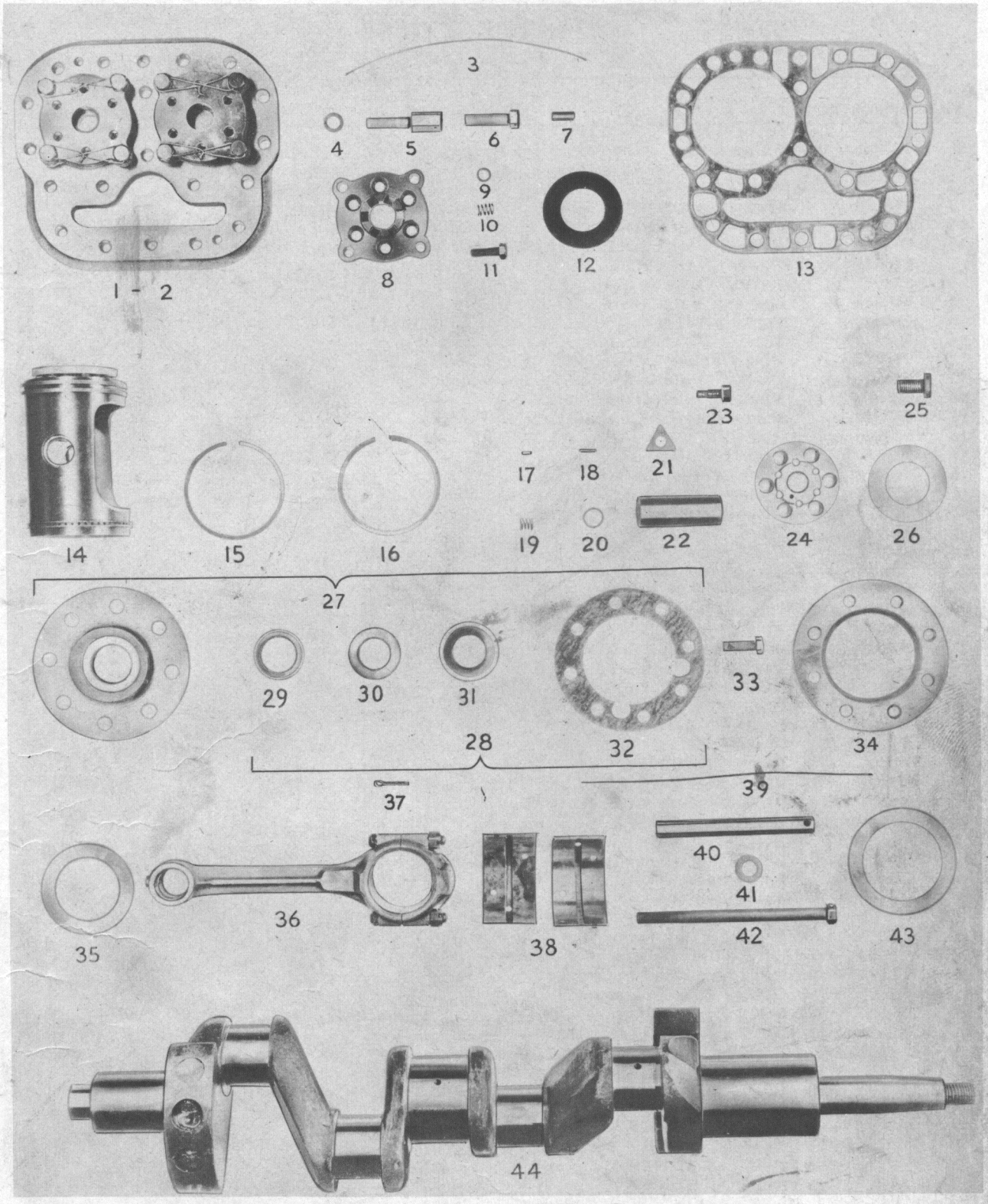

4 Cylinder Compressor Body (Interior Parts)

4 CYLINDER COMPRESSOR BODY
Interior Parts

Illus. No.	Piece No.	Description	Quantity Per Unit
1	1133487	Valve Assem. - Discharge 5876699	2
2	~~636086~~	Plate - Dischg. Valve Assem.	2
3	636037	Wire - Holding	8
4	636046	Washer - Valve Plate to Cyl. Block Mtg. (Lock)	8
5	636048	Screw - Valve Plate to Cyl. Block Mtg. (3/8 in. - 24 x 1 7/16 in. Spec. Head)	4
6	636444	Screw - Valve Plate to Cyl. Block Mtg. (3/8 in. - 24 x 1 7/16 in. Hex. Head)	4
7	640041	Dowel - Valve Plate	4
8	636067	Retainer - Valve Plate	4
9	636035	Spacer - Valve Plate	16
10	636044	Spring - Valve	24
11	636036	Screw - Valve Retainer Mtg.	16
12	636343	Ring - Valve	4
13	5445012	Gasket - Valve Plate to Cyl. Block Mtg.	2
14	EA-58720	Piston & Pin Assem.	4
15	640040	Ring - Compression	8
16	640125	Ring - Oil	4
17	635946	Pin - Locating	4
18	640124	Pin - Oil Ring Locating	4
19	636443	Spring - Piston	24
20	635945	Ring - Retainer Centering	4
21	640050	Plate - Screw Lock	4
22	635949	Pin - Wrist	4
23	640085	Screw - Wrist Pin Lock	4
24	636435	Retainer - Ring	4
25	635948	Screw - Retainer Mtg.	4
26	636343	Ring - Valve	4
27	5876521	Seal Assembly and Ring & Packing Unit Pkg.	1
28	1140835	Unit Pkg. (Rings & Packings)	1
29	635908	Seal - Ring Packing	1
30	636550	Seal - Ring	1
31	1137981	Seal, Seat & Packing Assem.	1
32	636365	Gasket - Seal Holding Ring	1
33	640047	Screw - Seal Mtg.	8
34	640075	Ring - Seal Holding	1
35	636348	Washer - Thrust (Oil Pump End)	2
36	1133624	Rod - Connecting	4
	636338	Bearing - Connecting Rod Crank Shaft	8
	640083	Bearing - Connecting Rod Wrist Pin	4
	640086	Bolt - Bearing Mtg.	8
	640088	Nut - Bearing Mtg.	8
37	640087	Pin - Connecting Rod Screw (Cotter)	8
38	636353	Bearing - Center	2
39	636495	Wire - Bearing Mtg. Bolt Holding	1
40	636347	Tube - Bearing Locating	2
41	641003	Washer - Bearing Mtg. Bolt (Lock)	2
42	636350	Bolt - Bearing Mtg.	2
43	636354	Washer - Thrust (Seal End)	2
44	1133622	Crankshaft Assem.	1

PARTS NOT ILLUSTRATED

	1133619	Block - Cylinder Block Center Bearing	1
	636364	Bearing - Cylinder Block (Flywheel End)	1
	636349	Line - Oil (Pump End)	1
	636351	Line - Oil (Flywheel End)	1
	636352	Line - Oil (Center Bearing)	1
	640063	Clamp - Oil Line Mtg.	2
	614806	Screw - Oil Line Clamp Mtg.	2
	92319	Nut - Oil Line Clamp Mtg.	2
	623189	Washer - Oil Line Clamp Mtg. (Lock)	2
	640062	Connector - Oil Line (Pump End)	1
	640061	Elbow - Oil Line Connection	1
	640064	Connector - Oil Line (Center Bearing)	1
	636053	Tee - Oil Line	1

Section II

CONDENSER UNITS

EM-20901
CONDENSER UNIT (DRY)
Replacement Parts

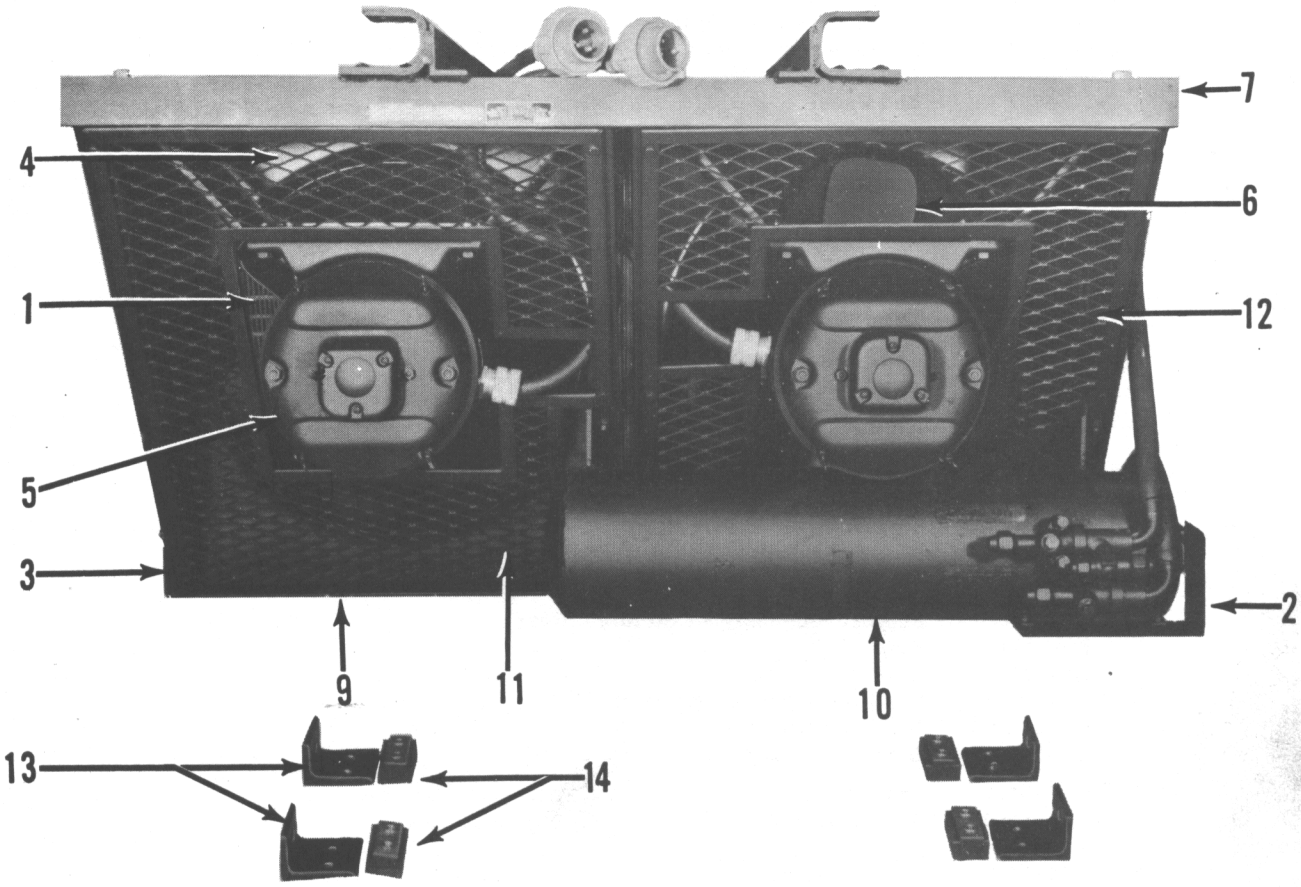

1. Condenser and Mtg. Parts
2. Frame Assembly (R.H.)
3. Frame Assembly (L.H.)
4. Fan Panel
5. Motor and Mtg. Parts
6. Condenser Fan
7. Top Support and Frame
8. Top Cover and Mtg. Parts
9. Bottom Angle
10. Receiver Assembly
11. Guard Assembly (L.H.)
12. Guard Assembly (R.H.)
13. Condenser Mountings
14. Condenser Supports

Illus. No.	Piece No.	Description	Quantity Per Unit
1	EM-20900	Condenser Assembly	1
	EA-172566	Header Assembly	1
	EA-172567	Header Assembly	1
2	ER-11009	Frame Assembly - Motor and Fan Panel (R.H.)	1
	EC-85560	Frame - Fan Panel	1
	EC-85559	Frame - Fan Panel (Top)	1
	EA-172669	Brace - Receiver Mtg.	2
	EA-172670	Gusset - Fan Panel and Motor Mtg. Bracket	2
	ED-39962	Fan and Motor Mtg. Bracket	1
	EC-85639	End Panel	1

(Continued)

EM-20901
CONDENSER UNIT

Illus. No.	Piece No.	Description	Quantity Per Unit
3	ER-11011	Frame Assembly - Motor and Fan Panel (L.H.)	1
	EC-85560	Frame - Fan Panel	1
	EC-85559	Frame - Fan Panel (Top)	1
	EA-172669	Brace - Receiver Mtg.	2
	EA-172670	Gusset - Fan Panel and Motor Mtg. Bracket	2
	ED-39962	Fan and Motor Mtg. Bracket	1
	EC-85639	End Panel	1
4	EC-85515	Fan Panel	2
	EA-135034	Screw - Fan Panel Mtg.	20
	EA-133006	Washer - Fan Panel Mtg. (Lock)	20
5	A-9391	Motor - Condenser Fan (3/4 H.P., 72 Volt - DC, 1750 RPM)	2
	EA-133235	Screw - Motor Mtg. (1/2-13 Hex)	8
	EA-135846	Nut - Motor Mtg. (Lock)	8
6	EC-83663	Fan - 18" Blade (6)	2
	EA-157901	Screw - Frame to Condenser Mtg. (1/2-13 Hex)	8
	EA-135846	Nut - Frame to Cond. Mtg. (Lock)	8
7	ER-7991	Top Support Frame Assembly	1
	ED-39990	Support Assembly - Motor Mtg. (Front)	1
	ED-39989	Support	1
	EA-118353	Hanger Support	2
	EA-117551	Rivet - Hanger Support Mtg.	4
	ED-39988	Support Assembly - Coil Mtg. (Rear)	1
	ED-39987	Support	1
	EA-118353	Hanger Support	2
	EA-117551	Rivet - Hanger Support Mtg.	4
	EA-172664	Block - Fastening	1
	EA-172666	Block - Tapping	2
	EB-10411	Angle - Frame	2
	EA-117551	Rivet - Angle Mtg.	4
8	ED-40003	Cover - Top	1
	EA-172892	Retainer - Screen (Top End)	1
	EA-157901	Screw - Condenser Top Frame Mtg. (End) (1/2-13 Hex)	2
	EA-133004	Washer - Condenser Top Frame Mtg. (End) (Lock)	2
	EA-157901	Screw - Support Mtg. Assembly Frame and Cover (1/2-13 Hex)	6
	EA-135846	Nut - Support Mtg. (Lock)	6
	EB-101379	Screen Retainer - Rear Top	2
	EA-134546	Screw - Retainer and Cover Mtg. (5/16-18 Hex)	6
	EA-133006	Washer - Retainer and Cover Mtg. (Lock)	6
	EA-135034	Screw - Cover Mtg. (Center)	3
	EA-133006	Washer - Cover Mtg. (Center) (Lock)	3
9	ED-39998	Bottom Angle Assembly	1
	ED-39997	Angle - Bottom Coil Mtg.	1
	EA-172665	Block - Fastening	3
	EA-132845	Screw (3/8-16 Hex)	2
	EC-85520	Brace - End	2
	EA-133235	Screw - Frame and End Brace Mtg. (Bottom) (1/2-13 Hex)	2
	EA-135846	Nut - Frame and End Brace Mtg. (Lock)	2
	EA-157901	Screw - Center End Plate Mtg.	1
	EA-135846	Nut - Center End Plate Mtg. (Lock)	1

EM-20901
CONDENSER UNIT

Illus. No.	Piece No.	Description	Quantity Per Unit
	EA-172867	Spacer (Top)	1
	EA-172956	Screw - Brace Mtg. (Top)	1
	EA-135846	Nut - Brace Mtg. (Top)	1
	ED-39999	Cover - Bottom	1
	EA-134546	Screw - Bottom Cover Mtg.	12
	EA-155568	Nut - Bottom Cover Mtg. (Lock)	12
	EC-85647	Access Door Assembly.	2
	EC-85648	Door - Access	2
	EA-172854	Clip - Side	2
	EA-172855	Clip - Top	1
	EA-172856	Clip - Bottom	1
10	EM-20913	Receiver Assembly	1
	EB-101570	Valve - Double Shut-off	1
	633773	Stem - Valve	1
	622921	Packing - Valve	1
	613544	Gasket - Packing	2
	613529	Nut - Packing	1
	EB-101569	Valve - Double Shut-off	1
	633773	Stem Valve	1
	622921	Packing - Valve	1
	613544	Gasket - Packing	2
	613529	Nut - Packing	1
	96269	Stem - Charging Valve	1
	42047	Gland - Charging Valve	1
	622092	Packing - Charging Valve	1
	42048	Nut - Charging Valve Packing	1
	613543	Gasket - Charging Valve Packing Nut	2
	613518	Cap - Valve	3
	636263	Glass - Sight	1
	640477	Gasket - Sight Glass (Lead)	1
	640476	Gasket - Sight Glass (Rubber).	1
	EA-171973	Retainer - Sight Glass Mtg.	1
	EA-171974	Screw (Socket Head) (5/16-18)	6
	ED-40071	Tube - Liquid In	1
	EA-172845	Cover - Tube Liquid Out	1
	EA-172844	Clamp	1
	5443424	Cap - Mt. on Tube	1
	ED-39958	Cover - Manifold	1
	EA-172861	Stud - Cover Mtg.	3
	EA-172861	Spacer - Cover Mtg.	3
	EA-133079	Washer - Cover Mtg. (Lock)	3
	EA-133080	Nut - Cover Mtg.	3
	ED-39959	Cover - Return Bends	1
	EA-172677	Stud - Cover Mtg.	3
	EA-172678	Spacer - Cover Mtg.	3
	EA-133079	Washer - Cover Mtg. (Lock)	3
	EA-133080	Nut - Cover Mtg.	3
	EA-172957	Screw - Receiver Mtg.	4
	EA-135845	Lock Nut - Receiver Mtg.	4
11	EC-85550	Guard Assembly (Front) (L.H.).	1
	EA-138308	Screw - Guard Mtg.	5
	EA-133079	Washer - Guard Mtg. (Lock)	5
12	EC-85552	Guard Assembly (Front) (R.H.).	1
	EA-138308	Screw - Guard Mtg.	5
	EA-133079	Washer - Guard Mtg. (Lock)	5

EM-20901
CONDENSER UNIT

Illus. No.	Piece No.	Description	Quantity Per Unit
	EB-10153	Screen - Guard (Front Bottom) (R.H.)	1
	EA-138308	Screw - Guard Mtg.	2
	EA-133079	Washer - Guard Mtg. (Lock)	2
	5444454	Washer - Guard Mtg. (Plain)	2
	ED-40069	Screen Assembly (Rear)	1
	EB-101509	Screen Frame (Rear)	2
	EB-101510	Screen Frame (Rear)	2
	EA-172843	Screen	1
	EA-135845	Nut - Screen Mtg. (Lock)	2
	EC-85662	Guard - Receiver Valves	1
	EA-138308	Screw - Guard Mtg.	3
	EA-133079	Washer - Guard Mtg. (Lock)	3
	EA-133080	Nut - Guard Mtg.	3
13	EA-118338	Mounting - Condenser Unit	4
	EA-118356	Screw (3/8-24)	16
	EA-79409	Washer (Lock)	16
14	EA-118352	Hanger Support	4

OPTIONAL PARTS

RECEPTACLE AND HOUSING

EB-73939	Base Receptacle (Single)	1
EB-172832	Base Receptacle (Double)	1
EB-73469	Receptacle Housing (Used with 72 V.,- 126 V. and 220 V.)	2
EB-73453	Receptacle - 3 Pole (Used with 220 V. - AC, 3 Phase, and 72 V. and 126 V. - DC)	2

Printed in U.S.A.

CONDENSER UNITS (DRY) (Continued)

CONDENSER MOTOR DATA

Dry

Motor Piece No.	H.P.	Voltage	R.P.M.	Cycle	Phase	Type Bearing
A-7180	1	220-AC	1725	60	3	Sleeve
A-7181	1	30-36-DC	1250/1750	--	-	Sleeve
A-7182	1	60-72-DC	1250/1750	--	-	Sleeve
A-7183	1	110-126-DC	1250/1750	--	-	Sleeve
A-7191	1	60-72-DC	1250/1750	--	-	Ball
A-7192 (Use A-7191)	1	60-72-DC	1250/1750	--	-	Ball
A-7193 (Use A-7191)	1	60-72-DC	1250/1750	--	-	Ball
A-7194	1	30-36-DC	1250/1750	--	-	Ball
A-7195	1	110-126-DC	1250/1750	--	-	Ball
A-7746	1	110-126-DC	1250/1750	--	-	Sleeve
A-8309	1	36-DC	1750	--	-	Ball
A-8310	1	72-DC	1750	--	-	Ball
A-8311	1	126-DC	1750	--	-	Ball
A-8324	1	60-72-DC	1250/1750	--	-	Ball
I-937	1	220-AC	1725	60	3	Ball

REFER TO MOTOR SECTION FOR REPLACEMENT PARTS

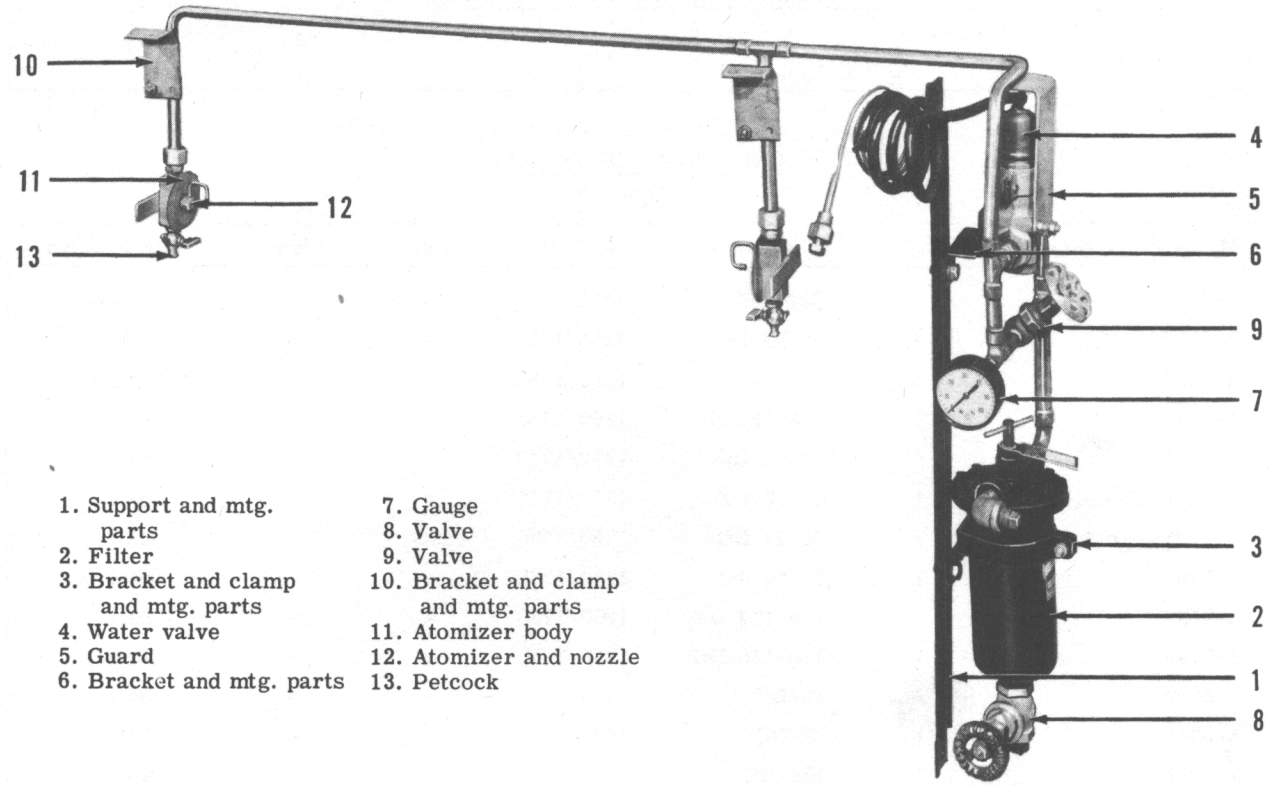

1. Support and mtg. parts
2. Filter
3. Bracket and clamp and mtg. parts
4. Water valve
5. Guard
6. Bracket and mtg. parts
7. Gauge
8. Valve
9. Valve
10. Bracket and clamp and mtg. parts
11. Atomizer body
12. Atomizer and nozzle
13. Petcock

Condenser Spray Assembly - (Tubing)

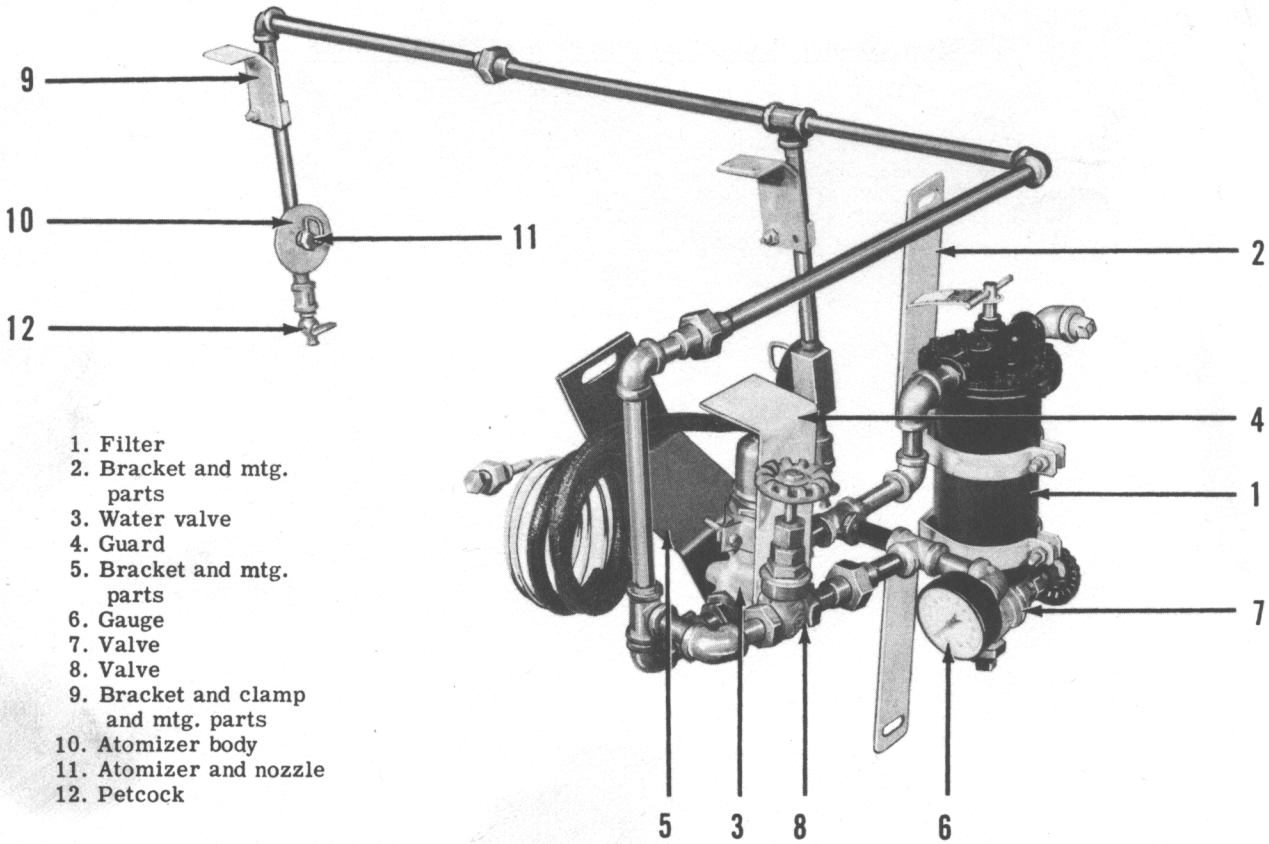

1. Filter
2. Bracket and mtg. parts
3. Water valve
4. Guard
5. Bracket and mtg. parts
6. Gauge
7. Valve
8. Valve
9. Bracket and clamp and mtg. parts
10. Atomizer body
11. Atomizer and nozzle
12. Petcock

Condenser Spray Assembly - (Pipe)

CONDENSER WATER SPRAY ASSEMBLY
Parts Information
(Tubing Connections - - NS)

Illus. No.	Piece No.	Description	Quantity Per Unit EM-15766 - EM-16366
1	EB-49714	Support Assem.	1
	EA-110996	Screw - Support Assem. Mtg.	2
	EA-79409	Washer - Support Assem. Mtg.	2
2	EB-70467	Filter Assem.	1
3	EA-133815	Clamp and Bracket Assem. - Filter Mtg.	1
	EA-79924	Screw - Filter Bracket Mtg. (1/4 in. - 20 x 1/4 in.)	1
	EA-79489	Nut - Filter Bracket Mtg. (1/2 in. - 20)	1
	EA-79407	Washer - Filter Bracket Mtg. (1/4 in. Lock)	1
	EA-110996	Screw - Bracket to Support Mtg. (3/8 in. - 16 x 3/4 in.)	1
	EA-79409	Washer - Bracket to Support Mtg. (3/8 in. Lock)	1
4	5440687	Valve - Water	1
	5881720	Element - Power	1
5	EA-118319	Guard - Water Valve	1
6	EB-49716	Bracket - Water Valve Mtg.	1
	EA-118322	Screw - Water Valve Bracket and Guard Mtg. (1/4 in. - 20 x 2 1/4 in.)	2
	EA-79407	Washer - Water Valve Bracket and Guard Mtg. (1/4 in. Lock)	2
	EA-79925	Washer - Water Valve Bracket and Guard Mtg. (Plain)	2
	EA-79489	Nut - Water Valve Bracket and Guard Mtg.	2
	EA-110996	Screw - Water Valve Bracket to Support Mtg. (3/8 in. - 16 x 3/4 in.)	1
	EA-79409	Washer - Water Valve Bracket to Support Mtg. (3/8 in. Lock)	1
7	1149690	Gauge - Water Pressure	1
8	EA-73579	Valve - 1/2 in. Gate (Water)	1
9	EA-133820	Valve - Water (Stop and Waste)	1
10	EA-118320	Bracket - Tubing to Condenser Mtg.	2
	EA-118321	Clamp - Tubing Support	2
	EA-111023	Screw - Bracket and Clamp Mtg.	6
	EA-79407	Washer - Bracket and Clamp Mtg. (Lock)	6
	EA-79489	Nut - Bracket and Clamp Mtg.	6
11	EA-118280	Body Assem. - Atomizer	2
12	EA-118284	Atomizer and Nozzle Assem.	2
13	1149210	Petcock (1/4 in.)	2

PARTS NOT ILLUSTRATED

628714	Clip - Loom Mtg.	5
5408333	Screw - Clip Mtg.	5
EA-79481	Washer - Clip Mtg. (Lock)	5

CONDENSER WATER SPRAY ASSEMBLY
Parts Information
(Pipe Connections--OS)

Illus. No.	Piece No.	Description	Quantity Per Unit EM-16063
1	EB-70467	Filter Assem.	1
2	EB-72269	Bracket - Filter Mtg.	2
	EA-79924	Screw - Filter Bracket Mtg. (1/4 in. - 20 x 1 1/4 in.)	2
	EA-79489	Washer - Filter Bracket Mtg. (1/4 in. Lock)	2
	EA-79407	Nut - Filter Bracket Mtg.	2
	EA-133312	Plate and Nut Assem. (Mounts on Screen)	1
	EA-118184	Screw - Plate and Nut Mtg. (3/8 in. - 16 x 1 in.)	1
	EA-79412	Washer - Plate and Nut Mtg. (Plain)	1
	EA-79409	Washer - Plate and Nut Mtg. (3/8 in. Lock)	1
3	5440687	Valve - Water	1
	5881720	Element - Power	1
4	EA-118319	Guard - Water Valve	1
5	EB-72270	Bracket - Water Valve Mtg.	1
	EA-118322	Screw - Water Valve to Bracket Mtg.	1
	EA-79407	Washer - Water Valve to Bracket Mtg. (Lock)	1
	EA-79925	Washer - Water Valve to Bracket Mtg. (Plain)	1
	EA-79489	Nut - Water Valve to Bracket Mtg.	1
6	1149690	Gauge - Water Pressure	1
7	EA-73579	Valve - 1/2 in. Gate (Water)	1
8	EA-118418	Valve - 1/4 in. Gate (Water)	1
9	EA-118320	Bracket - Pipe to Condenser Mtg.	2
	EA-118321	Clamp - Pipe Support	2
	EA-111023	Screw - Bracket and Clamp Mtg.	6
	EA-79407	Washer - Bracket and Clamp Mtg.	6
	EA-79489	Nut - Bracket and Clamp Mtg.	6
10	EA-118280	Body Assem. - Atomizer	2
11	EA-118284	Atomizer and Nozzle Assem.	2
12	1149210	Petcock	2

PARTS NOT ILLUSTRATED

628714	Clip - Loom Mtg.	5
5408333	Screw - Clip Mtg.	5
EA-79481	Washer - Clip Mtg. (Lock)	5

CONDENSER UNITS (FULL FLOODED)
Parts Information

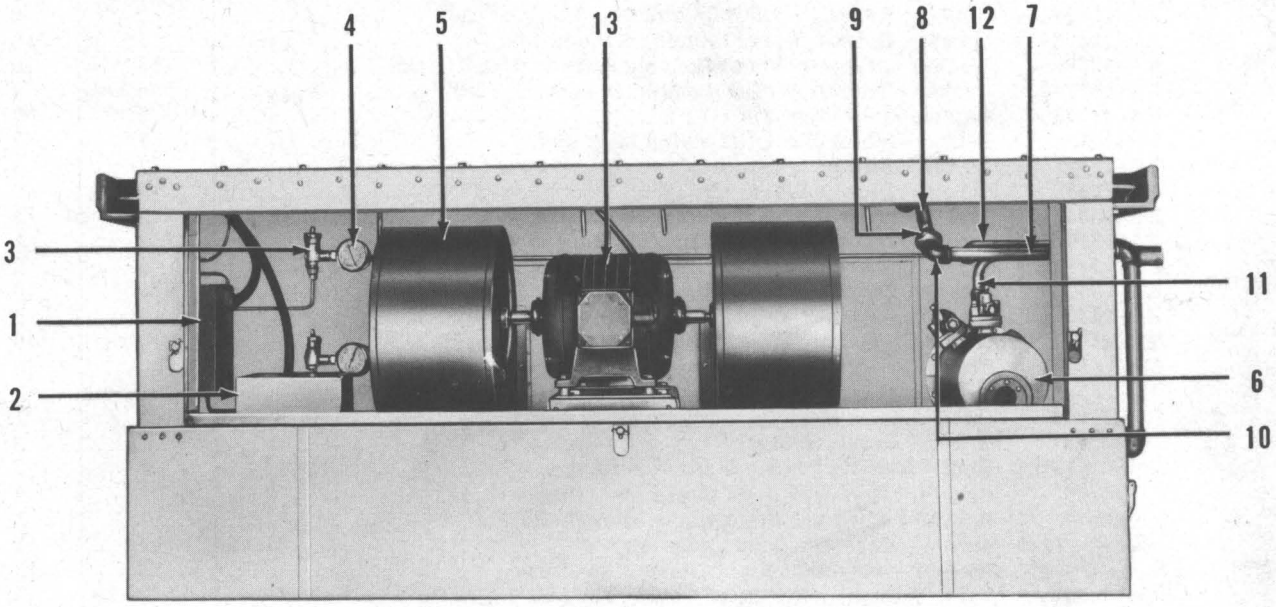

1. YL Switch assem. and mtg. parts
2. High pressure modulating switch and mtg. parts
3. Valve and parts
4. Gauge
5. Blower housing and parts
6. Receiver and parts
7. Pipe
8. Pipe
9. Union
10. Elbow
11. Liquid line and parts
12. Suction line and parts
13. Motor and mtg. parts

Typical Condenser Unit (Full Flooded) (Front View - Filters Removed)

Illus. No.	Piece No.	Description	Quantity Per Unit EM-15545	Quantity Per Unit EM-15725
1	1128851	Switch Assem. - Type YL-LOH	1	1
	EM-14630	Cutout Assem. - High-Low Pressure	1	1
	5401551	Switch - Safety	1	1
	EA-133031	Screw - Switch Assem. Mtg.	2	2
	EA-133006	Washer - Switch Assem. Mtg. (Lock)	2	2
	EA-133146	Nut - Switch Assem. Mtg.	2	2
2	EM-14868	Switch - High Pressure Modulating	1	1
	EA-133031	Screw - Switch Mtg.	2	2
	EA-133006	Washer - Switch Mtg. (Lock)	2	2
3	EA-133465	Valve Assem. - Packless (HP-LP Gauges)	2	2
	1133580	Needle, Bellows and Stem - Packless Valve	2	2
	636238	Clamp Nut - Packless Valve	2	2
	EA-133501	Bracket - Packless Valve Mtg. Support	2	2
	629962	Screw - Packless Valve Support Bracket Mtg.	4	4
	5444490	Washer - Packless Valve Support Bracket Mtg. (Lock)	4	4
	5403746	Washer - Packless Valve Support Bracket Mtg. (Plain)	4	4
	EA-133077	Screw - Packless Valve Mtg.	4	4
	5444490	Washer - Packless Valve Mtg. (Lock)	4	4
	EA-133080	Nut - Packless Valve Mtg.	4	4
	EA-133469	Grommet - Tube Assem. Mtg.	1	1
4	EA-70552	Gauge - Low Pressure	1	1
	EA-79458	Gauge - High Pressure	1	1

(Continued on next page)

CONDENSER UNITS (FULL FLOODED) (Continued)

Illus. No.	Piece No.	Description	Quantity Per Unit EM-15545	EM-15725
5	ED-18354	Housing Assem. - Blower Wheel	2	2
	EA-135034	Screw - Blower Wheel Housing Assem. Mtg.	16	16
	EA-133006	Washer - Blower Wheel Housing Assem. Mtg. (Lock)	16	16
	EA-133845	Gasket - Blower Wheel Housing Flange	4	4
	EA-44788	Extension - Motor Shaft	2	2
	5441800	Screw - Motor Shaft Extension Mtg. (Set)	2	2
	EC-47871	Wheel - Blower	2	2
	EA-78338	Screw - Blower Wheel Mtg. (Set)	2	2
	EA-133611	Seal - Blower Wheel Housing (Upper Air)	2	2
	EA-133612	Seal - Blower Wheel Housing (Lower Air)	2	2
	EB-49459	Lip - Blower Wheel Housing	2	2
	EA-133077	Screw - Blower Wheel Housing Lip Mtg.	10	10
	EA-133078	Washer - Blower Wheel Housing Lip Mtg. (Plain)	10	10
	5444490	Washer - Blower Wheel Housing Lip Mtg. (Lock)	10	10
	EA-133080	Nut - Blower Wheel Housing Lip Mtg.	10	10
6	EM-15592	Receiver - Assem.	1	1
	636263	Glass - Receiver Sight	2	2
	EA-132723	Ring - Receiver Sight Glass Retaining	2	2
	640476	Gasket - Receiver Sight Glass Mtg. (Rubber)	2	2
	640477	Gasket - Receiver Sight Glass Mtg. (Lead Tin)	2	2
	EA-117930	Screw - Receiver Sight Glass Mtg.	12	12
	EA-79407	Washer - Receiver Sight Glass Mtg. (Lock)	12	12
	1149209	Valve Assem. - Receiver Double Shut-off	2	2
	633773	Stem - Receiver Double Shut-off Valve	2	2
	622921	Packing - Receiver Double Shut-off Valve	8	8
	613544	Gasket - Receiver Double Shut-off Valve	8	8
	613529	Nut - Receiver Double Shut-off Valve	2	2
	96287	Plug (1/4 in. P.) - Receiver Double Shut-off Valve	2	2
	639390	Connector - (3/4 in. P. x 7/8 in. Fl.) Receiver Double Shut-off Valve	2	2
	613518	Cap - Receiver Double Shut-off Valve Stem	2	2
	642683	Gasket - Receiver Double Shut-off Valve Mtg.	2	2
	EA-132724	Screw - Receiver Shut-off Valve Mtg.	4	4
	EA-133367	Screw - Receiver Mtg.	4	4
	EA-133005	Washer - Receiver Mtg. (Lock)	4	4
7	EA-133123	Pipe - Water Spray (3/4 in. x 13 3/8 in.)	1	1
8	EA-133124	Pipe - Water Spray (3/4 in. x 3 1/4 in.)	1	1
9	EA-132986	Union - Water Spray (3/4 in.)	1	1
10	EA-132988	Elbow - Water Spray (90° x 3/4 in.)	1	1
11	EB-49949	Line - Liquid (.045 x 7/8 in. OD Copper) (Out)	1	1
	635721	Elbow - 90°	1	1
	EA-79813	Cap - Line	1	1
12	EA-133471	Line - Suction (.055 x 1 3/8 in. OD x 12 in. Copper)	1	1
	EA-133470	Line - Suction (.055 x 1 3/8 in. OD x 6 in. Copper)	1	1
	640443	Elbow 90°	1	1
	EA-133841	Gasket - Suction Line	1	1
13		Motor (See Page 19)	1	1
	EA-133004	Washer - Motor Mtg. (Lock)	4	4
	EA-133235	Screw - Motor Mtg.	4	4

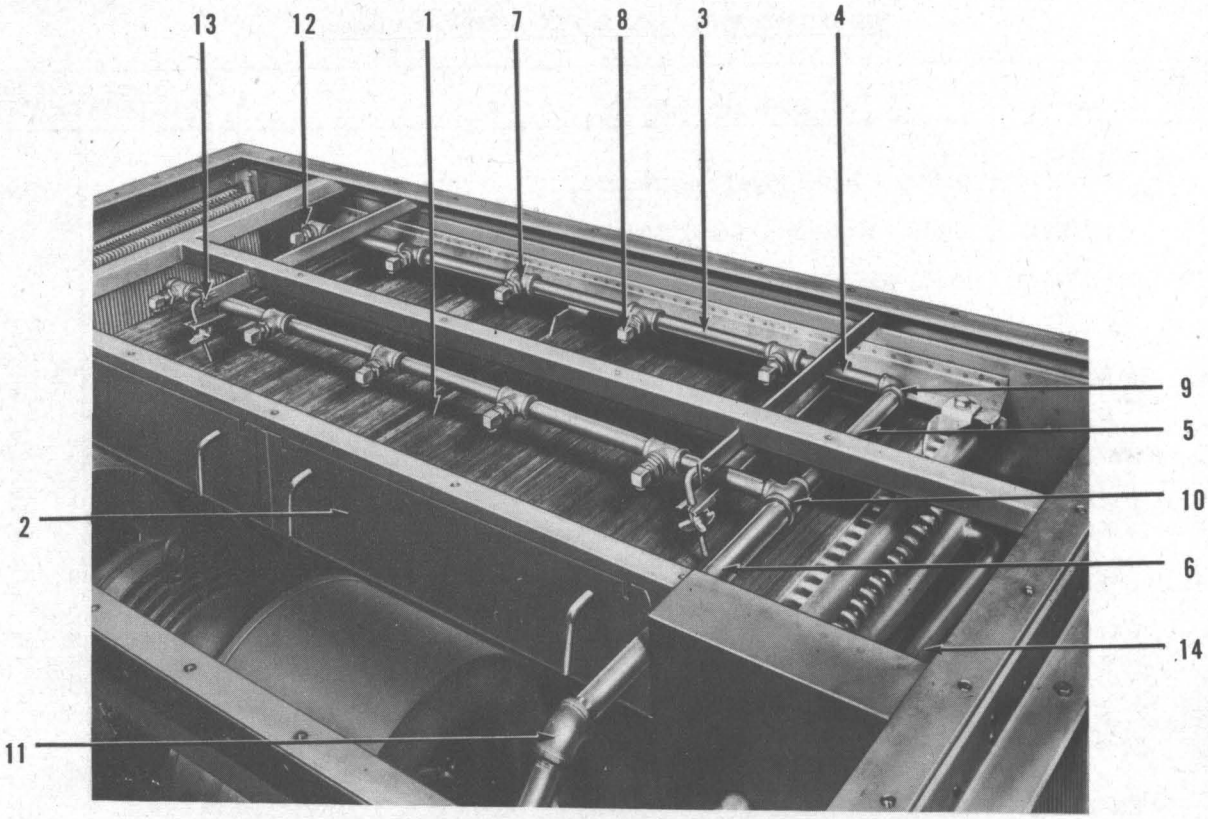

1. Condenser and mtg. parts
2. Water spray door panels and parts
3. Pipe
4. Pipe
5. Pipe
6. Pipe
7. Tee
8. Spray nozzle and parts
9. Elbow
10. Tee
11. Elbow
12. Plug
13. Latch support angle and parts
14. Liquid line and parts

Typical Condenser Unit (Full Flooded) (Top View - Spray)

CONDENSER UNITS (FULL FLOODED) (Continued)

Illus. No.	Piece No.	Description	Quantity Per Unit EM-15545	Quantity Per Unit EM-15725
1	EM-15584	Condenser	1	1
	EA-133209	Screw - Condenser Mtg.	6	6
	EA-133004	Washer - Condenser Mtg. (Lock)	6	6
2	EB-49485	Panel - Water Spray Door (Less Parts) (L.H.)	1	1
	EB-49486	Panel - Water Spray Door (Less Parts) (R.H.)	1	1
	5417332	Handle and Latch - Water Spray Door Panel (Unit Pkg.)	4	4
3	EA-133127	Pipe - Water Pipe Spray (1/2 in. x 8 1/4 in.)	8	8
4	EA-133126	Pipe - Water Pipe Spray (1/2 in. x 5 1/2 in.)	2	2
5	EA-133125	Pipe - Water Pipe Spray (1/2 in. x 10 3/8 in.)	1	1
6	EA-133122	Pipe - Water Pipe Spray (3/4 in. x 15 in.)	1	1
7	EA-133121	Tee - Water Pipe Spray (1/2 in. x 1/2 in. x 1/4 in.)	10	10
8	EA-132972	Nozzle - Water Pipe Spray	10	10

(Continued on next page)

CONDENSER UNITS (FULL FLOODED) (Continued)

Illus. No.	Piece No.	Description	Quantity Per Unit EM-15545	EM-15725
8	(Continued)			
	EA-132971	Orifice - Water Pipe Spray Nozzle	10	10
9	EA-132987	Elbow - Water Pipe Spray (90° x 1/2 in.)	1	1
10	EA-132989	Tee - Water Pipe Spray (3/4 in. x 1/2 in. x 1/2 in.)	1	1
11	EA-132990	Elbow - Water Pipe Spray (45° x 3/4 in.)	1	1
12	613508	Plug - Water Pipe Spray	2	2
13	EA-133141	Angle - Water Spray Latch Support	2	2
	EA-133149	Screw - Water Spray Latch Support Angle Mtg.	2	2
	EA-133146	Nut - Water Spray Latch Support Angle Mtg.	4	4
	EA-134174	Bolt - Water Spray Latch	2	2
	EA-133015	Pin - Water Spray Latch Bolt Mtg. (Cotter)	2	2
	EA-133138	Knob - Water Spray Latch Bolt	2	2
	EA-133006	Washer - Water Spray Latch Bolt Mtg. (Lock)	2	2
14	EA-49481	Line - Coil to Rec. Liquid (IN) (7/8 in.)	1	1
	EA-133842	Gasket - Liquid Line	1	1
		PARTS NOT ILLUSTRATED		
	EA-135069	Baffle - Condenser	2	2
	EA-111423	Screw - Condenser Baffle Mtg.	4	4
	5444490	Washer - Condenser Baffle Mtg.	4	4

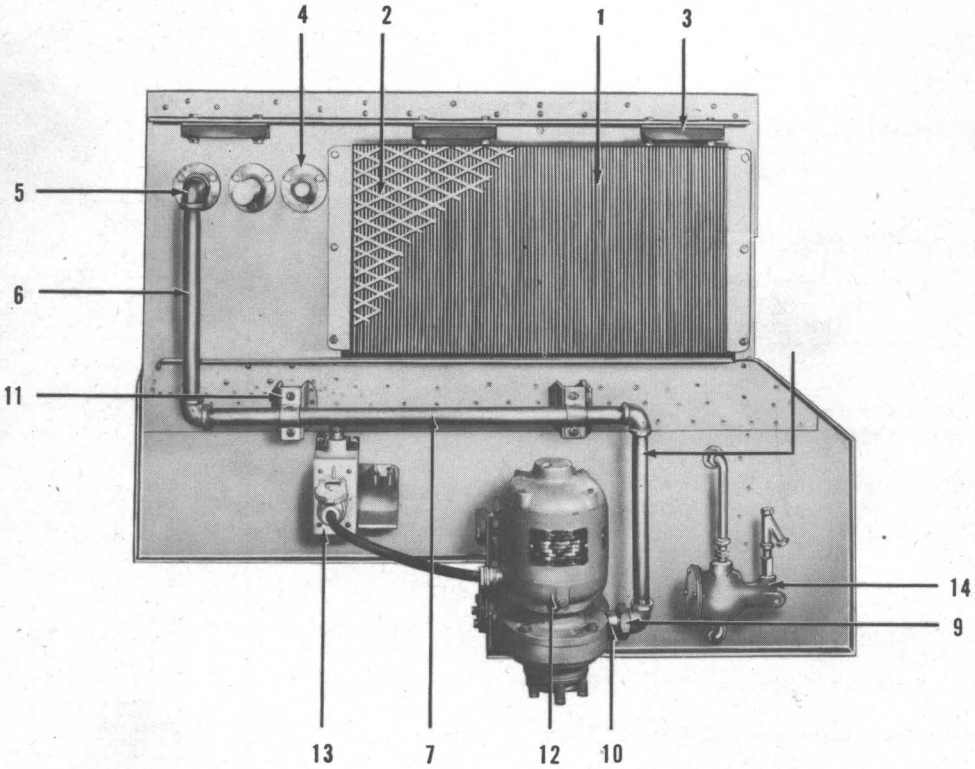

1. Spray eliminator
2. Eliminator guard and mtg. parts
3. Condenser mtg. and mtg. parts
4. Retainer and gaskets
5. Elbow
6. Pipe
7. Pipe
8. Pipe
9. Union
10. Nipple
11. Clamp and mtg. pts.
12. Motor and pump and mtg. parts
13. Receptacle and housing assem. and mtg. parts
14. Water supply control and pts.

Typical Condenser Unit (Full Flooded) (Pump End View)

(See next page for Parts Information)

CONDENSER UNITS (FULL FLOODED) (Continued)

Illus. No.	Piece No.	Description	Quantity Per Unit EM-15545	EM-15725
1	EM-15612	Eliminator - Spray	1	1
	EA-134605	Seal - Eliminator	1	1
2	EC-47992	Guard Assem. - Eliminator	1	1
	EA-134546	Screw - Spray Eliminator and Guard Mtg.	6	6
	EA-133006	Washer - Spray Eliminator and Guard Mtg.	6	6
3	EA-132679	Mounting - Evap. Condenser (Rubber)	3	3
	EA-133085	Screw - Evap. Condenser Mtg.	12	12
	EA-133005	Washer - Evap. Condenser Mtg. (Lock)	12	12
4	EA-132906	Gasket - Water Pipe	1	1
	EA-132905	Gasket - Discharge Line	1	1
	EA-132907	Gasket - Liquid Line	1	1
	EA-132908	Retainer - Water, Discharge and Liquid Line Mtg.	3	3
	EA-134546	Screw - Water, Dischg. and Liquid Line Mtg.	9	9
	EA-133006	Washer - Water, Dischg. and Liquid Line Mtg.	9	9
5	EA-132988	Elbow - Water Spray (90° x 3/4 in.)	4	4
6	EA-133134	Pipe - Water Spray (3/4 in. x 12 5/8 in.)	1	-
	EA-134067	Pipe - Water Spray (3/4 in. x 7 1/8 in.)	-	1
7	EA-133135	Pipe - Water Spray (3/4 in. x 28 3/16 in.)	1	-
	EA-134068	Pipe - Water Spray (3/4 in. x 6 1/4 in.)	-	1
	EA-132986	Union - Water Spray (3/4 in. x 1 15/16 in.)	-	1
	EA-134066	Pipe - Water Spray (3/4 in. x 20 1/8 in.)	-	1
8	EA-133136	Pipe - Water Spray (3/4 in. x 12 5/8 in.)	1	1
9	EA-132986	Union - Water Spray (3/4 in. x 1 15/16 in.)	1	1
10	EA-133128	Nipple - Water Spray(Close)(3/4 in. x 1 3/8 in.)	3	3
11	EA-132994	Clamp - Pipe Mtg.	2	2
	EA-135034	Screw - Pipe Clamp Mtg.	4	4
	EA-133006	Washer - Pipe Clamp Mtg. (Lock)	4	4
12		Motor and Pump (See Page 18)	1	1
	EA-132647	Gasket - Water Tank Pump and Motor Mtg.	1	1
	EA-132651	Screw - Water Tank Pump and Motor to Strainer Ext. Mtg.	6	6
	EA-133006	Washer - Water Tank Pump and Motor to Strainer Ext. Mtg. (Lock)	6	6
	EA-123845	Screw - Water Tank Pump and Motor Mtg.	2	2
	EA-133005	Washer - Water Tank Pump and Motor Mtg. (Lock)	2	2
	EA-133368	Nut - Water Tank Pump and Motor Mtg.	2	2
13		Receptacle and Housing Assem. (See Page 18)	1	1
	EA-135034	Screw - Receptacle and Housing Mtg.	2	2
	EA-133006	Washer - Receptacle and Housing Mtg. (Lock)	2	2
14	EA-135025	Nipple - Water Controller (Mt. in Bottom Conn. on Right End Panel)	-	1
	EA-135024	Elbow - (1/2 in. Street) (Mt. on Nipple)	-	1
	636253	Bushing - (3/8 in. x 1/2 in.) (Mt. on Elbow)	-	1
	EA-135020	Controller - Water Level (Mt. on Bushing)	-	1
	636253	Bushing - (3/8 in. x 1/2 in.) (Mt. in Controller)	-	1
	EA-135023	Tube - Water Cont. Line (Mt. between Cont. and Top Connector)	-	1
	634253	Nipple - (3/8 in. x 2 in.)	-	1
	EA-135264	Strainer - Water Controller	-	1

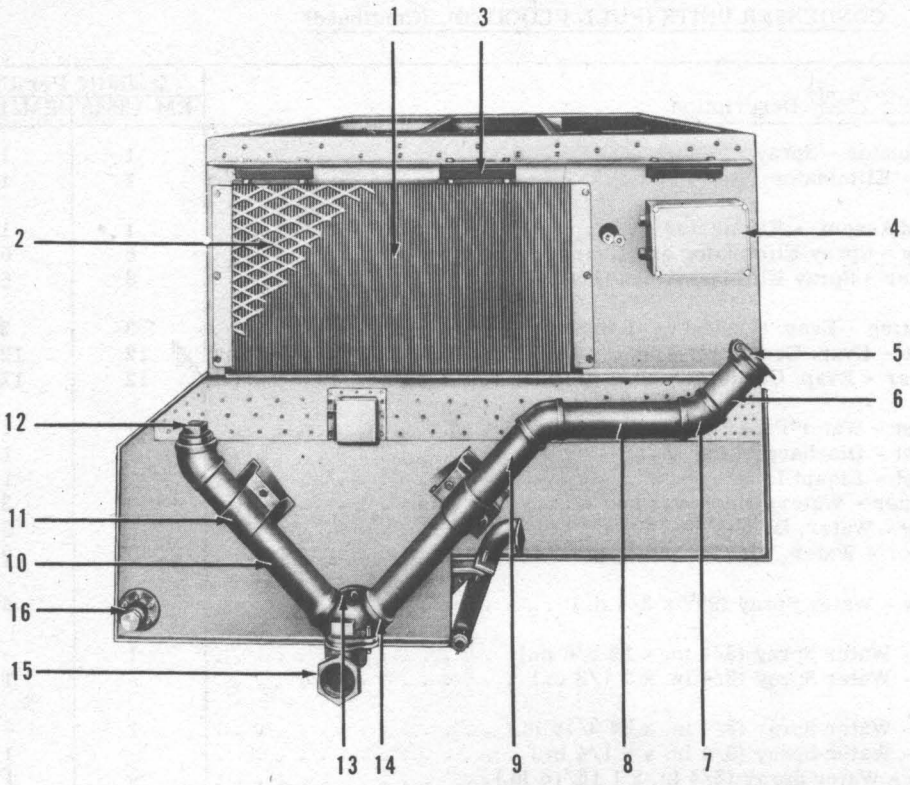

1. Eliminator and parts
2. Eliminator guard and mtg. parts
3. Condenser mounting and mtg. parts
4. Junction box and parts
5. Cap
6. Tube
7. Elbow
8. Tube
9. Tube
10. Tube
11. Clamp and mtg. pts.
12. Plug
13. Plate assem. and mtg. pts.
14. Drain and fill connection
15. Drain cock
16. Agitator pipe and mtg. pts.

Typical Condenser Unit (Full Flooded) (Filler Pipe End View)

CONDENSER UNITS (FULL FLOODED) (Continued)

Illus. No.	Piece No.	Description	Quantity Per Unit EM-15545	Quantity Per Unit EM-15725
1	EM-15612	Eliminator - Spray	1	1
	EA-134605	Seal - Eliminator	1	1
2	EC-47992	Guard Assem. - Eliminator	1	1
	EA-134546	Screw - Spray Eliminator and Guard Mtg.	6	6
	EA-133006	Washer - Spray Eliminator and Guard Mtg. (Lock)	6	6
3	EA-132679	Mounting - Evap. Condenser (Rubber)	3	3
	EA-133085	Screw - Evap. Condenser Mtg.	12	12
	EA-133005	Washer - Evap. Condenser Mtg. (Lock)	12	12
4	EC-47708	Box - Junction	1	1
	EB-49707	Lid - Junction Box	1	1
	EB-49708	Gasket - Junction Box Lid Mtg.	1	1
	EA-133849	Screw - Junction Box Lid Mtg.	4	4
	5444490	Washer - Junction Box Lid Mtg. (Lock)	4	4
	5409516	Connector - Junction Box HP-LP Cutout Leads (Straight)	2	2
	642792	Plug - Junction Box (3/4 in. Pipe)	2	2
	EA-133844	Connector - Junction Box Motor Lead	1	1
	EA-133843	Cover - Junction Box Motor Lead	1	1
	EA-133848	Lock Nut - Junction Box Motor Lead Conn. Mtg.	1	1
	EA-110254	Clamp - Junction Box Motor Lead Cover Mtg.	2	2
	642209	Plug - 1/4 in. Pipe	1	1
5	EB-49456	Cap - Filler Pipe	1	1
6	EA-133832	Tube - Filler Pipe Cap (2 in. x 4 in.)	1	1
7	EA-133159	Elbow - Filler Pipe (45° x 2 in.)	3	3
8	EA-133831	Tube - Filler Pipe (2 in. x 9 1/4 in.)	1	-
	EA-134065	Tube - Filler Pipe (2 in. x 13 1/8 in.)	-	1

(Continued on next page)

CONDENSER UNITS (FULL FLOODED) (Continued)

Illus. No.	Piece No.	Description	Quantity Per Unit EM-15545	Quantity Per Unit EM-15725
9	EA-133830	Tube - Filler Pipe (2 in. x 16 3/4 in.)	1	-
	EA-134064	Tube - Filler Pipe (2 in. x 10 1/2 in.)	-	1
10	EA-133829	Tube - Filler Pipe (2 in. x 12 7/8 in.)	1	-
	EA-134063	Tube - Filler Pipe (2 in. x 3 in.)	-	1
	EA-134313	Tube - Filler Pipe (2 in. x 5 1/2 in.)	-	1
11	EA-133114	Clamp - Filler Pipe Mtg.	2	2
	EA-135034	Screw - Filler Pipe Clamp Mtg.	4	4
	EA-133006	Washer - Filler Pipe Clamp Mtg. (Lock)	4	4
12	EA-133001	Plug - Filler Pipe	1	1
13	EA-133069	Plate Assem. - Filler Pipe Reinforcing	1	1
	EA-133067	Gasket - Filler Pipe Assem. Drain Conn.	2	2
	EA-133146	Nut - Filler Pipe Assem. to Rein. Plate Mtg.	5	5
	EA-133006	Washer - Filler Pipe Assem. to Rein. Plate Mtg. (Lock)	5	5
14	EB-49461	Drain and Fill Conn. - Filler Pipe Assem.	1	1
15	EB-49447	Cock - Filler Pipe Lockwing Drain	1	1
16	EA-133231	Plate and Screw Assem. - Agitator Pipe Mtg.	1	1
	EA-133089	Flange - Agitator Pipe	1	1
	EA-133146	Nut - Agitator Pipe Flange Mtg.	6	6
	EA-133006	Washer - Agitator Flange Mtg. (Lock)	6	6
	EA-35713	Plug - Agitator Pipe	1	1
	EA-133090	Pipe - Agitator	1	1
	EA-133091	Cap - Agitator Pipe	1	1
	EA-132994	Clamp - Agitator Pipe Mtg.	1	1
	EA-135034	Screw - Agitator Pipe Clamp Mtg.	2	2
	EA-133006	Washer - Agitator Pipe Clamp Mtg. (Lock)	2	2

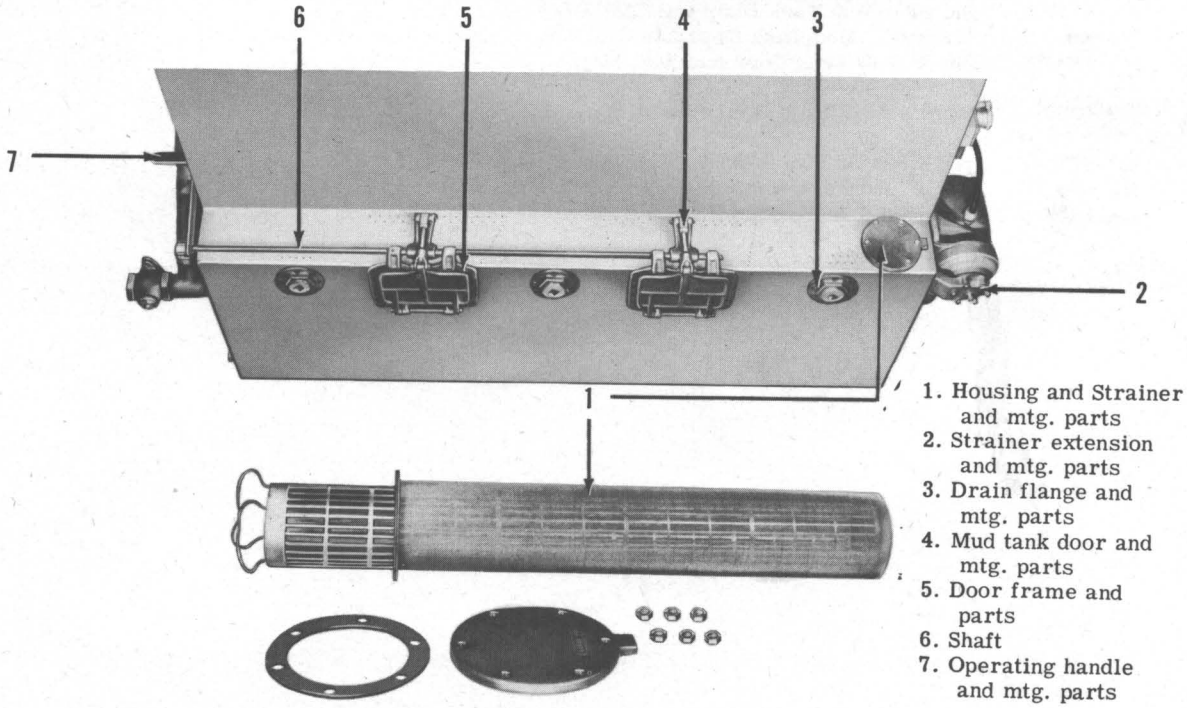

Typical Condenser Unit (Full Flooded) (Bottom View)

(See next page for Parts Information)

CONDENSER UNITS (FULL FLOODED) (Continued)

Illus. No.	Piece No.	Description	Quantity Per Unit EM-15545	EM-15725
1	EM-16915	Strainer - Water Tank	1	1
	EB-74281	Plate - Water Tank Strainer End	1	1
	EB-74282	Gasket - Water Tank Strainer End Plate	1	1
	EA-137239	Stud - Water Tank Strainer End Plate Mtg.	6	6
	EA-135472	Nut - Water Tank Strainer End Plate Mtg.	6	6
	ED-34018	Housing - Water Tank Strainer	1	1
	EB-49281	Gasket - Strainer Cover Plate	1	1
2	EC-47294	Extension - Water Tank Strainer	1	1
	EA-132656	Screw - Water Tank Strainer Extension Mtg. (Inside)	6	6
	EA-133006	Washer - Water Tank Strainer Extension Mtg. (Inside) (Lock)	6	6
	EA-132654	Gasket - Water Tank Strainer Extension (Inside)	2	2
	96287	Plug - Water Tank Strainer Extension	1	1
3	EB-49686	Flange - Water Tank Drain	3	3
	EA-133718	Gasket - Water Tank Drain Flange Mtg.	3	3
	EA-133031	Screw - Water Tank Drain Flange Mtg.	24	24
	EA-133006	Washer - Water Tank Drain Flange Mtg. (Lock)	24	24
	EA-133001	Plug - Water Tank Drain Flange Pipe	3	3
4	EC-47410	Door - Mud Tank	2	2
	EA-133009	Pin - Mud Tank Door to Door Frame Mtg.	2	2
	EA-133024	Pin - Mud Tank Door Pin Retaining (Cotter)	4	4
	EA-133204	Clevis - Mud Tank Door Operating	2	2
	EA-133215	Pin - Mud Tank Door to Clevis Mtg.	2	2
	EA-133015	Pin - Mud Tank Door Clevis Pin Retaining (Cotter)	4	4
	EA-133500	Rod and Block Assem. - Mud Tank Door Adjusting	2	2
	EA-133203	Yoke - Mud Tank Door Operating	2	2
	EA-78338	Screw - Mud Tank Door to Mud Tank Shaft Mtg.	4	4
	EA-133010	Pin - Mud Tank Door Yoke to Adjusting Rod Mtg.	2	2
	EA-133015	Pin - Mud Tank Door Adjusting Rod Pin Retaining (Cotter)	4	4
5	EC-47409	Frame - Mud Tank Door	2	2
	EB-49521	Seal Plate and Gasket Assem. - Mud Tank Door	2	2
	EA-133242	Gasket - Mud Tank Door Seal Plate	2	2
	EA-133077	Screw - Mud Tank Door and Seal Mtg.	40	40
	5444490	Washer - Mud Tank Door and Seal Mtg.	40	40
	EA-133080	Nut - Mud Tank Door and Seal Mtg.	40	40
6	EB-49507	Shaft - Mud Tank Door Actuating	1	1
7	EC-47506	Handle - Mud Tank Door Operating	1	1
	EA-133198	Pin - Mud Tank Door Handle to Shaft Mtg. (Tapered)	2	2
	EA-133023	Pin - Mud Tank Door Handle Position Locking (Tapered)	1	1

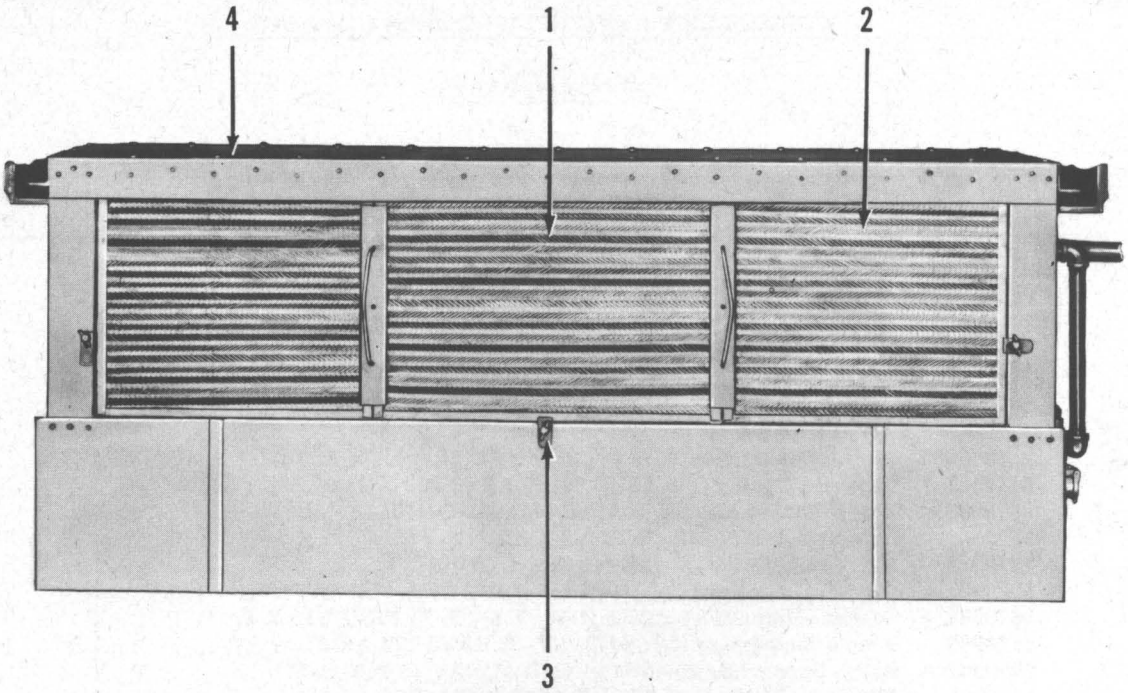

1. Center filter
2. End filter and mtg. parts
3. Clamp and parts
4. Top panel and mtg. parts

Typical Condenser Unit (Full Flooded) (Front View - With Filters)

CONDENSER UNITS (FULL FLOODED) (Continued)

Illus. No.	Piece No.	Description	Quantity Per Unit EM-15545	Quantity Per Unit EM-15725
1	EB-49482	Filter - Air (Center) (1 in. x 25 in.)	1	1
	EB-73142	Filter - Air (Center) (2 in. x 25 in.) (Optional)	1	1
2	EB-49483	Filter - Air (End) (1 in. x 20 in.)	2	2
	EB-73144	Filter - Air - L.H. (End) (2 in. x 19 7/8 in.) (Optional)	1	1
	EB-73143	Filter - Air - R.H. (End) (2 in. x 19 7/8 in.) (Optional)	1	1
	EC-47971	Brace Assem. (Brace and Handles) (For 1 in. Filters)	1	1
	EC-48152	Brace Assem. (Brace and Handles) (For 2 in. Filters) (Optional)	1	1
	EA-134526	Screw - Filter Brace Mtg.	4	4
	EA-133080	Nut - Filter Brace Mtg.	4	4
	5444490	Washer - Filter Brace Mtg. (Lock)	4	4
	635821	Washer - Filter Brace Mtg. (Plain)	4	4
	EB-49491	Clamp - Air Filter Retaining	2	2
	EA-133006	Washer - Clamp to Filter Mtg. (5/16 in. Lock)	4	4
	EA-133146	Nut - Clamp to Filter Mtg.	4	4
	EC-82805	Grille - Dynamic (Optional)	1	1
3	EA-133181	Clamp - Air Filter and Filter Clamp Retaining (1 in. Filter)	3	3
	EA-135001	Clamp - Air Filter and Filter Clamp Retaining (2 in. Filter) (Optional)	3	3
	EA-133861	Knob - Air Filter and Filter Clamp Retaining	3	3
4	ED-34579	Panel - Condenser Tank Top	1	1
	EA-134546	Screw - Cond. Tank Top Panel Mtg.	50	50
	EA-133006	Washer - Cond. Tank Top Panel Mtg. (5/16 in. Lock)	50	50
	EA-133170	Washer - Cond. Tank Top Panel Mtg. (11/32 in. Plain)	50	50
	EA-134628	Washer - Cond. Tank Top Panel Mtg. (3/8 in. Plain)	50	50

CONDENSER UNITS (FULL FLOODED) (Continued)

OPTIONAL PARTS

Illus. No.	Piece No.	Description	Quantity Per Unit EM-15545	EM-15725
12	+ A-7188	Motor - Pump (36 Volt - DC, 2000 RPM, 1/4 H.P.)	1	1
	+ A-7189	Motor - Pump (72 Volt - DC, 2000 RPM, 1/4 H.P.)	1	1
	+ I-686	Motor - Pump (220 Volt - AC, 60 Cycle, 1750 RPM, 1/4 H.P.)	1	1
	*5870990	Pump Assembly (Less Motor) (B/M 24491R-A)	1	1
	5870979	Casing and Ring Assembly (I-R #1 & 6) (W-75 KRVS 1 MX 3 and Y-17606 AX 1)	1	1
	5870981	Ring - Casing (I-R #6) (Y-176 D 6 AX 1)	1	1
	5416322	Gasket - Casing (I-R #290) (Y-75 KRVS 290 X 2)	1	1
	5870986	Bolt - Casing Mtg. (I-R #177) (17 A 2-C-110)	4	4
	5870980	Impeller (I-R #3) (X-75 KRVS 3 AX 2)	1	1
	5870982	Key - Impeller (I-R #11) (#3 Woodruff)	1	1
	5870983	Screw - Impeller (Cap) (I-R #82) (92 A 2-Z-172)	1	1
	5870988	Gasket - Impeller to Shaft (I-R #336) (Y-75 KRVS 336 X 1)	1	1
	5870985	Head - Supporting (I-R #172) (W-75 KRVS 172 AX 5)	1	1
	5870987	Bolt - Supporting Head Mtg. (I-R #177A) (17 A 2-C-57)	4	4
	5870984	Flinger - Water (I-R #57) (Y-0625 B 157 X 2)	1	1
	5416320	Seal Assembly (I-R #429) (Per Pump List 24307BK) (Includes Spauldite Washers)	1	1
		Seal Replacement Unit Pkg.		
	*5417277	Unit Pkg. - Seal and Gasket	1	1
	5416320	Seal - Water Pump	1	1
	5416322	Gasket - Casing	1	1
	5416324	Washer - Water Pump Seal (Felt)	1	1
	EA-132647	Gasket - Pump to Housing Mtg. (Flat)	1	1
	EA-136652	Gasket - Pump to Housing Mtg. (Ring)	1	1
	5416323	Instruction Sheet	1	1
13	EC-47455	Receptacle and Housing - Water Pump (2 Pole)	1	1
	EC-47456	Receptacle and Housing - Water Pump (3 Pole)	1	1

+ - Refer to Motor Section for Replacement Parts

* - When Ordering Replacement Parts Show the Water Pump Serial Number.

CONDENSER UNITS (FULL FLOODED) (Continued)

CONDENSER MOTOR DATA

Full Flooded

Motor Piece No.	H.P.	Voltage	RPM	Cycle	Phase	Type Bearing
BLOWER						
A-7178 (Use A-7742)	1	72-DC	1200	--	-	Sleeve
A-7179 (Use A-7740)	1	36-DC	1200	--	-	Sleeve
A-7196 (Use A-7743)	1	36-DC	1200	--	-	Ball
A-7197 (Use A-7745	1	72-DC	1200	--	-	Ball
A-7740	1	36-DC	1200	--	-	Sleeve
A-7742	1	72-DC	1200	--	-	Sleeve
A-7743	1	36-DC	1200	--	-	Ball
A-7745	1	72-DC	1200	--	-	Ball
A-8303	1	36-DC	1200	--	-	Ball
A-8304	1	72-DC	1200	--	-	Ball
I-683	1	220-AC	1140	60	3	Ball
I-939	1	220-AC	1140	60	3	Ball
PUMP						
A-7188	1/4	36-DC	2000	--	-	Ball
A-7189	1/4	72-DC	2000	--	-	Ball
A-8312 (33-1/2 in. Lead)	1/4	36-DC	2000	--	-	Ball
A-8313	1/4	72-DC	2000	--	-	Ball
A-8328 (55 in. Lead)	1/4	36-DC	2000	--	-	Ball
I-686	1/4	220-AC	1725	60	3	Ball
I-890	1/4	220-AC	1750	60	3	Ball

REFER TO MOTOR SECTION FOR REPLACEMENT PARTS

Section III

AIR CONDITIONING UNITS

EM-18017

AIR CONDITIONING UNIT - - (DIRECT DRIVE)

Parts Information

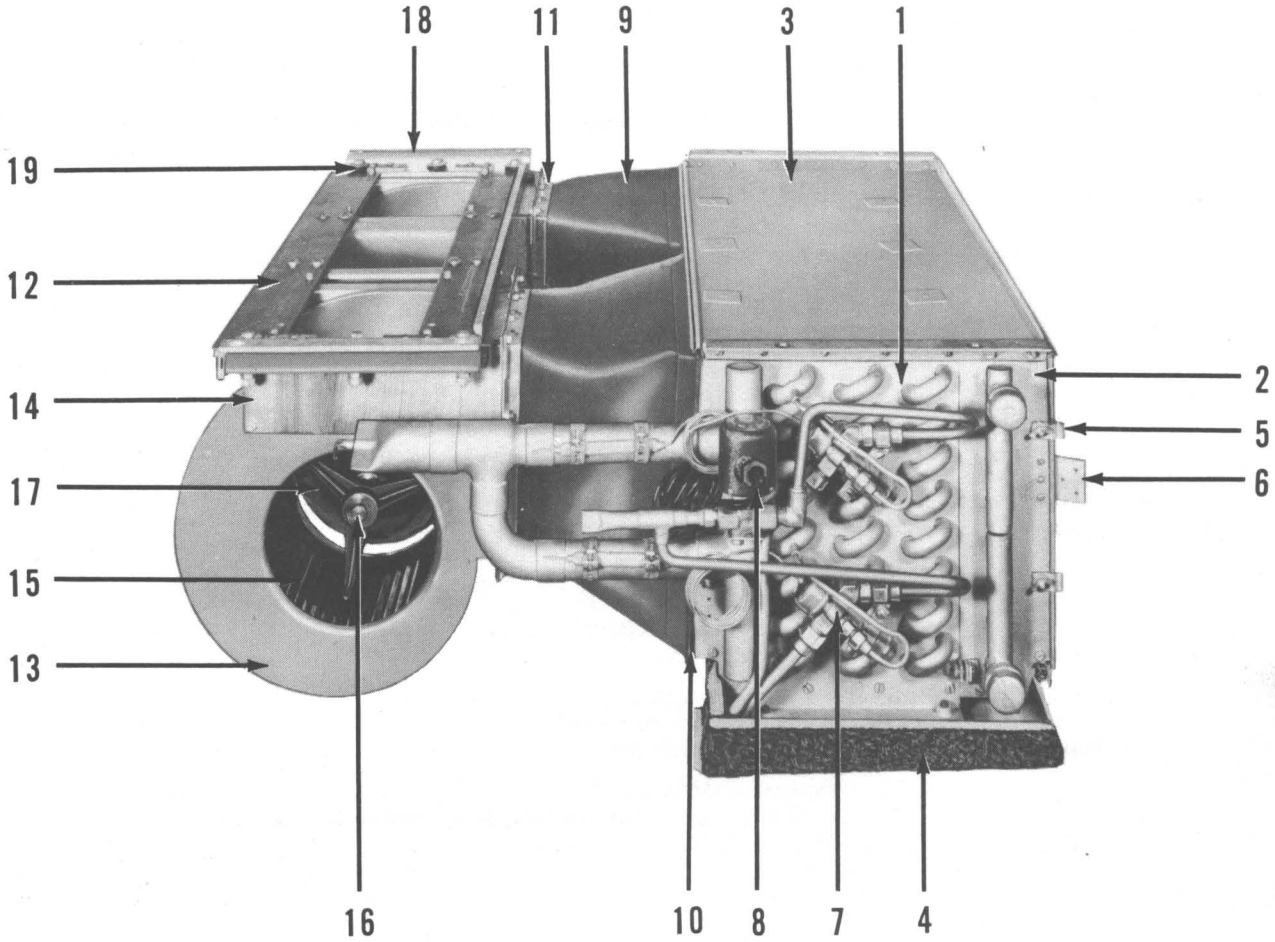

1. Cooling Coil and Parts
2. Steam Coil and Mtg. Parts
3. Cover and Duct Retainer and Mtg. Parts
4. Drain and Drip Pans and Mtg. Parts
5. Duct Clip and Mtg. Parts
6. Switch Bracket and Mtg. Parts
7. Expansion Valve and Mtg. Parts
8. Solenoid Valve and Mtg. Parts
9. Blower Duct
10. Blower Duct Frame (Large)
11. Blower Housing Frame and Mtg. Parts (Small)
12. Blower Housing and Motor Frame
13. Blower Housing, Lip and Mtg. Parts
14. Housing Support and Mtg. Parts
15. Blower Wheel
16. Extension Shaft
17. Motor and Mtg. Parts
18. Rail and Mtg. Parts
19. Bushing and Parts

Illus. No.	Piece No.	Description	Quantity Per Unit
1	EM-16037	Coil Assembly - Cooling	1
	EB-72093	Baffle Assembly - Center	1
	625303	Rivet - Baffle Mtg.	2
2	EM-15406	Coil Assembly - Steam	1
	EA-118142	Screw - Steam Coil Mtg.	4
	EA-79408	Washer - Steam Coil Mtg. (Lock)	4

(Continued On Next Page)

EM-18017
AIR CONDITIONING UNIT

Illus. No.	Piece No.	Description	Quantity Per Unit
3	EC-47077	Cover and Duct Retainer Assembly (Mt. with Angles)	1
	EB-72247	Angle - Cooling Coil and Cover Mtg. (L.H.)	1
	EB-72248	Angle - Cooling Coil and Cover Mtg. (R.H.)	1
	EA-118142	Screw - Angle Mtg.	10
	EA-79408	Washer - Angle Mtg. (Lock)	10
	EA-79460	Nut - Angle Mtg.	10
	EA-134999	Rod Assembly - Cover Retaining (Cover Mtg.)	1
4	ED-18112	Pan - Drain	1
	EA-130655	Screw - Drain Pan Mtg.	4
	ED-18248	Pan - Cooling Coil Drip	1
	EA-133758	Nut - Drip Pan Mtg. (Wing)	5
	EA-118140	Screw - Drip Pan Mtg. (1/4"-20 x 1/2")	10
	EA-79407	Washer - Drip Pan Mtg. (1/4" Lock)	10
	5855741	Screw - Baffle to Pan Mtg. (10-32 x 1/4")	2
	EA-79481	Washer - Baffle to Pan Mtg. (#10 Lock)	2
	ED-18247	Pan - Steam Coil Drip	1
	EA-133758	Nut - Drip Pan Mtg. (Wing)	5
	EA-118140	Screw - Drip Pan Mtg. (1/4"20 x 1/2")	6
	EA-79407	Washer - Drip Pan Mtg. (1/4" Lock)	6
	EA-118142	Screw - Pull Coils and Pans Together (5/16"-18 x 3/4")	2
	EA-79408	Washer - Pull Coils and Pans Together (5/16" Lock)	2
5	EA-117368	Clip - Duct	8
	EA-79925	Washer - Duct Clip Mtg. (Lock)	8
	EA-79407	Washer - Duct Clip Mtg. (Plain)	8
	EA-77959	Nut - Duct Clip Mtg.	8
6	EA-118194	Bracket - Thermo Switch	1
	626170	Screw - Thermo Switch Bracket Mtg.	3
	EA-79481	Washer - Thermo Switch Bracket Mtg. (Lock)	3
7	1130902	Valve - Expansion (MX49ECC) (For Parts See Master Catalog SER-504, Section 3, Page 26)	2
	5442177	Clamp - Thermo Bulb	4
	613545	Screw - Clamp Mtg.	4
	635160	Nut - Clamp Mtg.	4
	EA-112239	Clamp - Expansion Valve Mtg.	2
	641155	Screw - Expansion Valve Mtg.	4
	EA-79481	Washer - Expansion Valve Mtg.	4
8		Valve - Solenoid (Optional) (See Optional Parts Page 3-29)	1
	EB-72258	Bracket - Solenoid Valve Mtg.	1
	5855741	Screw - Valve Bracket Mtg. (10-32 x 1/4")	2
	EA-79481	Washer - Valve Bracket Mtg. (#10 Lock)	2
	EA-79573	Screw - Solenoid Valve Mtg. (10-32 x 1/2")	2
	EA-79481	Washer - Solenoid Valve Mtg. (#10 Lock)	2
	EA-79927	Nut - Solenoid Valve Mtg.	2
9	ED-36353	Duct Assembly - Blower (Includes Frames)	1
9A	EA-150696	Duct - Blower (Fabric)	1
10	ED-18018	Frame - Blower Duct (Mt. on Coil)	1
11	EC-47052	Frame - Blower Duct (Mt. on Blower)	2
	EA-79520	Screw - Frame to Blower Mtg.	24
	EA-79407	Washer - Frame to Blower Mtg. (Lock)	24
	EA-79489	Nut - Frame to Blower Mtg.	24
12	ED-18284	Frame Assembly - Blower Housing and Motor	1

(Continued on Next Page)

EM-18017
AIR CONDITIONING UNIT

Illus. No.	Piece No.	Description	Quantity Per Unit
13	ED-18279	Housing Assembly - Blower	2
	93650	Screw - Blower Housing to Frame Mtg. (3/8"-16 x 7/8" Hex Head) (Outside)	4
	EA-132760	Screw - Blower Housing to Frame Mtg. (3/8"-16 x 7/8" Round Head) (Inside)	4
	5413720	Washer - Blower Housing to Frame Mtg. (Lock)	8
	93249	Washer - Blower Housing to Frame Mtg. (Plain)	8
	EC-47037	Lip - Blower	2
	EA-77343	Screw - Blower Lip Mtg.	10
	624011	Nut - Blower Lip Mtg.	10
	621186	Washer - Blower Lip Mtg. (Plain)	4
	629432	Washer - Blower Lip Mtg. (Lock)	10
14		Support - Blower Housing (None Used on This Model)	
15	EC-47869	Wheel - Blower	2
16	EA-44788	Shaft - Extension	2
	5441800	Screw - Extension Shaft	4
17		Motor - Blower (Optional) (See Optional Parts Below)	1
	638499	Screw - Motor Mtg.	4
	EB-72592	Washer - Motor Mtg.	4
18	EB-71980	Rail - Frame Mtg.	2
	EB-23849	Pad - Rail Mtg. (Rubber)	2
19	EA-38066	Bushing - Rail Mtg. (Rubber)	6
	EA-44778	Washer - Rail Mtg. (Plain)	6
	EA-71348	Screw - Rail Mtg.	6
	60150	Nut - Rail Mtg.	12

OPTIONAL PARTS

SOLENOID VALVES

EA-118242	Valve - Solenoid (30-36 Volt - DC)	1
EA-118193	Valve - Solenoid (60-72 Volt - DC)	1
EA-118241	Valve - Solenoid (110 Volt - AC)	1
EA-118249	Valve - Solenoid (110 Volt - DC)	1
EA-118364	Valve - Solenoid (220 Volt - AC)	1

COILS FOR SOLENOID VALVES

49864	Coil - Solenoid Valve (30-36 Volt - DC)	1
49460	Coil - Solenoid Valve (60-72 Volt - DC)	1
49568	Coil - Solenoid Valve (110 Volt - AC)	1
49507	Coil - Solenoid Valve (110 Volt - DC)	1
49482	Coil - Solenoid Valve (220 Volt - AC)	1

SURGE PREVENTOR FOR SOLENOID VALVES (ALL VOLTAGES)

EA-112687	Surge Preventor - Solenoid Valve	1

MOTORS

*A-8319	Motor - Blower 1 H.P., 60 Volt - DC, 1250 RPM	1

* See Section 5 Master Catalog (SER-504) For Motor Replacement Parts.

AIR CONDITIONING UNITS--(DIRECT DRIVE)
Parts Information

Illus. No.	Piece No.	Description	Quantity Per Unit EM-15830	EM-16048	EM-16053	EM-16057	EM-16071	EM-16099
1	EM-16091	Coil Assem. - Cooling	-	-	-	-	-	-
	EM-15554	Coil Assem. - Cooling	-	-	-	-	-	-
	EM-15608	Coil Assem. - Cooling	-	-	-	-	-	-
	EM-16037	Coil Assem. - Cooling	1	1	-	-	-	1
	EM-15715	Coil Assem. - Cooling	-	-	-	-	-	-
	EM-15814	Coil Assem. - Cooling	-	-	-	-	-	-
	EM-16056	Coil Assem. - Cooling	-	-	1	-	-	-
	EM-16059	Coil Assem. - Cooling	-	-	-	1	-	-
	EM-16091	Coil Assem. - Cooling	-	-	-	-	1	-
	EB-72093	Baffle - Center	1	1	1	-	1	1
	EB-49449	Baffle - Center	-	-	-	-	-	-
	625303	Rivet - Baffle Mtg.	2	2	2	-	2	2
2	EM-16784	Coil Assem. - Steam	1	1	1	1	1	1
	EM-16067	Coil Assem. - Steam	-	-	-	-	-	-
	EM-15806	Coil Assem. - Steam	-	-	-	-	-	-
	EM-18633	Coil Assem. - Steam	-	-	-	-	-	-
	EM-15802	Coil Assem. - Steam	-	-	-	1	-	-
	EA-118142	Screw - Steam Coil Mtg. (5/16 in. - 18 x 3/4 in.)	4	4	4	-	4	4
	EA-79408	Washer - Steam Coil Mtg. (5/16 in. Lock)	4	4	4	-	4	4
	619497	Screw - Coil to Top Angle Mtg. (1/4 in. - 20 x 5/8 in.)	-	-	-	4	-	-
	EA-79407	Washer - Coil to Top Angle Mtg. (1/4 in. Lock)	-	-	-	4	-	-
	616395	Nut - Coil to Top Angle Mtg. (1/4 in. - 20)	-	-	-	4	-	-
3	EC-47077	Cover and Duct Retainer Assem. (Mt. with Angles)	1	1	1	-	1	1
	EB-72280	Cover and Duct Retainer Assem. (Mt. with Angles)	-	-	-	-	-	-
	ED-15803	Cover - Cooling Coil (Mt. with Angles)	-	-	-	1	-	-
	EC-47415	Cover and Duct Retainer Assem. (Mt. with Angles)	-	-	-	-	-	-
	EB-72247	Angle - Cooling Coil Mtg. (L.H.)	1	1	1	-	1	1
	EB-72248	Angle - Cooling Coil Mtg. (R.H.)	1	1	1	-	1	1
	EB-28479	Angle - Cooling Coil Mtg. (L.H.)	-	-	-	1	-	-
	EB-28480	Angle - Cooling Coil Mtg. (R.H.)	-	-	-	1	-	-
	EC-47533	Angle - Cooling Coil Mtg. (L.H.)	-	-	-	-	-	-
	EC-47532	Angle - Cooling Coil Mtg. (R.H.)	-	-	-	-	-	-
	EA-118142	Screw - Angle Mtg. (5/16 in. - 18 x 3/4 in.)	10	10	10	-	10	10
	EA-79460	Nut - Angle Mtg. (5/16 in. - 18)	10	10	10	-	10	10
	EA-79408	Washer - Angle Mtg. (5/16 in. Lock)	10	10	10	-	10	10
	637588	Screw - Cover and Angle Mtg. (1/4 in. - 20 x 1 in.)	-	-	-	12	-	-
	EA-79407	Washer - Cover and Angle Mtg. (1/4 in. Lock)	-	-	-	12	-	-
	624011	Nut - Cover and Angle Mtg. (1/4 in. - 20)	-	-	-	12	-	-
	EA-132060	Wire - Tie (Cover Hold Down)	3	3	3	-	3	3
	EA-44777	Wire - Tie (Cover Hold Down)	-	-	-	2	-	-
	641762	Wire - Tie (Cover Mtg.)	-	-	-	2	-	-
	EA-134999	Rod Assem. - Cover Retaining (Cover Mtg.) (Optional)	1	1	1	-	1	1
4	ED-18112	Pan - Drain	1	1	1	-	1	1
	ED-18296	Pan - Drain	-	-	-	-	-	-
	ED-16939	Pan - Drain	-	-	-	1	-	-
	ED-34142	Pan - Drain	-	-	-	-	-	-
	EA-130655	Screw - Drain Pan Mtg. (3/8 in. - 24 x 1 in. Spec. Head)	4	4	4	-	4	4
	EA-47505	Screw - Drain Pan Mtg. (1/2 in. - 20 x 13/16 in. Spec. Head)	-	-	-	6	-	-
	ED-18248	Pan - Cooling Coil Drip	1	1	1	-	1	1
	EA-133758	Nut - Cooling Coil Drip Pan (Wing)	5	5	5	-	5	5
	ED-34087	Pan - Cooling and Steam Coil Drip	-	-	-	1	-	-
	ED-34101	Pan - Cooling Coil Drip	-	-	-	-	-	-
	EA-133758	Nut - Cooling Coil Drip Pan (Wing)	-	-	-	-	-	-
	EA-118140	Screw - Drip Pan Mtg. (1/4 in. - 20 x 1/2 in.)	10	10	10	-	10	10

(Continued on next page)

AIR CONDITIONING UNIT (DIRECT DRIVE) (Continued)

Illus. No.	Piece No.	Description	Quantity Per Unit EM-15528	EM-15531	EM-15606	EM-15685	EM-15714	EM-15724	EM-15816
4 (Continued)									
	EA-79407	Washer - Drip Pan Mtg. (1/4 in. Lock)	10	10	-	10	10	-	10
	622420	Screw - Baffle to Pan Mtg. (10-32 x 1/4 in.)	2	2	-	2	2	-	2
	EA-79481	Washer - Baffle to Pan Mtg. (#10 Lock)	2	2	-	2	2	-	2
	5425398	Screw - Pan to Cooling Coil (10-32 x 1/2 in.)	-	-	8	-	-	8	-
	EA-79481	Washer - Pan to Cooling Coil (#10 Lock)	-	-	8	-	-	8	-
	5425398	Screw - Pan to Steam Coil (10-32 x 1/2 in.)	-	-	4	-	-	4	-
	EA-79481	Washer - Pan to Steam Coil (#10 Lock)	-	-	4	-	-	4	-
	ED-18247	Pan - Steam Coil Drip	1	-	-	1	-	-	1
	EA-133758	Nut - Drip Pan (Wing)	5	-	-	5	-	-	5
	EB-72281	Pan - Steam Coil Drip	-	1	-	-	-	-	-
	ED-34099	Pan - Steam Coil Drip	-	-	-	-	1	-	-
	EA-133758	Nut - Drip Pan (Wing)	-	-	-	-	5	-	-
	EA-118140	Screw - Drip Pan Mtg. (1/4 in. - 20 x 1/2 in.)	6	6	-	6	6	-	6
	EA-79407	Washer - Drip Pan Mtg. (1/4 in. Lock)	6	6	-	6	6	-	6
	EA-118142	Screw - Pull Coils and Pans together (5/16 in. - 18 x 3/4 in.)	2	2	-	2	2	-	2
	EA-79408	Washer - Pull Coils and Pans together (5/16 in. Lock)	2	2	-	2	2	-	2
5	EA-117368	Clip - Duct	8	4	-	8	8	-	8
	EA-79925	Washer - Duct Clip Mtg. (Plain)	8	4	-	8	8	-	8
	EA-79407	Washer - Duct Clip Mtg. (Lock)	8	4	-	8	8	-	8
	EA-77959	Nut - Duct Clip Mtg. (1/4 in. - 20 Wing)	8	4	-	8	8	-	8
	EA-74322	Clip - Duct	-	-	2	-	-	2	-
	629224	Screw - Duct Clip Mtg.	-	-	4	-	-	4	-
	5444706	Washer - Duct Clip Mtg. (Lock)	-	-	4	-	-	4	-
6	EA-118194	Bracket - Thermo Switch	1	-	-	1	1	-	1
	626170	Screw - Switch Bracket Mtg.	3	-	-	3	3	-	3
	EA-79481	Washer - Switch Bracket Mtg. (Lock)	3	-	-	3	3	-	3
7	1130902	Valve - Expansion (MX-49-ECC) (See Page 26 for parts)	2	2	-	2	2	-	2
	1130818	Valve - Expansion (MX-48-ECC) (See Page 26 for parts)	-	-	2	-	-	2	-
	5442177	Clamp - Thermo Bulb	4	4	4	4	4	4	4
	613545	Screw - Thermo Bulb Clamp Mtg.	4	4	4	4	4	4	4
	635160	Nut - Thermo Bulb Clamp Mtg.	4	4	4	4	4	4	4
	EA-112239	Clamp - Expansion Valve Mtg.	2	2	2	2	2	2	2
	641155	Screw - Expansion Valve Clamp Mtg.	4	4	4	4	4	4	4
	EA-79481	Washer - Expansion Valve Clamp Mtg. (Lock)	4	4	4	4	4	4	4
8		Valve - Solenoid (See Page 26)	1	1	1	1	1	1	1
	EB-72258	Bracket - Solenoid Valve Mtg.	1	-	-	1	-	-	1
	EA-118367	Bracket - Solenoid Valve Mtg.	-	1	-	-	-	-	-
	EA-118239	Bracket - Solenoid Valve Mtg.	-	-	1	-	-	1	-
	EA-132901	Bracket - Solenoid Valve Mtg.	-	-	-	-	1	-	-
	5855741	Screw - Valve Bracket Mtg. (10-32 x 1/4 in.)	2	2	-	2	-	-	2
	EA-79481	Washer - Valve Bracket Mtg. (#10 Lock)	2	2	-	2	-	-	2
	EA-79520	Screw - Valve Bracket Mtg. (1/4 in. - 20 x 1/2 in.)	-	-	2	-	-	2	-
	EA-79407	Washer - Valve Bracket Mtg. (1/4 Lock)	-	-	2	-	-	2	-
	EA-79608	Screw - Valve Bracket Mtg. (1/4 in. - 20 x 5/8 in.)	-	-	-	-	2	-	-
	EA-79407	Washer - Valve Bracket Mtg. (1/4 in. Lock)	-	-	-	-	2	-	-
	EA-79489	Nut - Valve Bracket Mtg. (1/4 in. - 20)	-	-	-	-	2	-	-
	EA-79573	Screw - Solenoid Valve Mtg. (10-32 x 1/2 in.)	2	2	2	2	2	2	2
	EA-79481	Washer - Solenoid Valve Mtg. (#10 Lock)	2	2	2	2	2	2	2
	EA-79927	Nut - Solenoid Valve Mtg. (10-32)	2	2	2	2	2	2	2
9	EA-118275	Duct - Blower	1	1	-	-	-	-	1
	EA-118270	Duct - Blower	-	-	1	-	-	1	-
	EA-118357	Duct - Blower	-	-	-	1	-	-	-
	EA-133688	Duct - Blower	-	-	-	-	1	-	-
	EA-118335	Duct - Blower	-	-	-	-	-	-	-

 (Continued on next page)

AIR CONDITIONING UNIT (DIRECT DRIVE) (Continued)

Illus. No.	Piece No.	Description	Quantity Per Unit EM-15830	EM-16048	EM-16053	EM-16057	EM-16071	EM-16099
4 (Continued)								
	EA-79407	Washer - Drip Pan Mtg. (1/4 Lock)	10	10	10	-	10	10
	622420	Screw - Baffle to Pan Mtg. (10-32 x 1/4 in.)	2	2	2	-	2	2
	EA-79481	Washer - Baffle to Pan Mtg. (#10 Lock)	2	2	2	-	2	2
	5425398	Screw - Pan to Cooling Coil Mtg. (10-32 x 1/2 in.)	-	-	-	8	-	-
	EA-79481	Washer - Pan to Cooling Coil Mtg. (#10 Lock)	-	-	-	8	-	-
	5425398	Screw - Pan to Steam Coil Mtg. (10-32 x 1/2 in.)	-	-	-	4	-	-
	EA-79481	Washer - Pan to Steam Coil Mtg. (#10 Lock)	-	-	-	4	-	-
	ED-18247	Pan - Steam Coil Drip	1	1	1	-	1	1
	EA-133758	Nut - Drip Pan (Wing)	5	5	5	-	5	5
	EB-72281	Pan - Steam Coil Drip	-	-	-	-	-	-
	ED-34099	Pan - Steam Coil Drip	-	-	-	-	-	-
	EA-133758	Nut - Drip Pan (Wing)	-	-	-	-	-	-
	EA-118140	Screw - Drip Pan Mtg. (1/4 in. - 20 x 1/2 in.)	6	6	6	-	6	6
	EA-79407	Washer - Drip Pan Mtg. (1/4 in. Lock)	6	6	6	-	6	6
	EA-118142	Screw - Pull Coils and Pans together (5/16 in. - 18 x 3/4 in.)	2	2	2	-	2	2
	EA-79408	Washer - Pull Coils and Pans together (5/16 in. Lock)	2	2	2	-	2	2
5	EA-117368	Clip - Duct	8	8	8	-	8	8
	EA-79925	Washer - Duct Clip Mtg. (Plain)	8	8	8	-	8	8
	EA-79407	Washer - Duct Clip Mtg. (Lock)	8	8	8	-	8	8
	EA-77959	Nut - Duct Clip Mtg. (1/4 in. - 20 Wing)	8	8	8	-	8	8
	EA-74322	Clip - Duct	-	-	-	2	-	-
	629224	Screw - Duct Clip Mtg.	-	-	-	4	-	-
	5444706	Washer - Duct Clip Mtg. (Lock)	-	-	-	4	-	-
6	EA-118194	Bracket - Thermo Switch	1	1	1	-	1	1
	626170	Screw - Switch Bracket Mtg.	3	3	3	-	3	3
	EA-79481	Washer - Switch Bracket Mtg. (Lock)	3	3	3	-	3	3
7	1130902	Valve - Expansion (MX-49-ECC) (See Page 26 for parts)	2	2	2	-	2	2
	1130818	Valve - Expansion (MX-48-ECC) (See Page 26 for parts)	-	-	-	2	-	-
	5442177	Clamp - Thermo Bulb Mtg.	4	4	4	4	4	4
	613545	Screw - Thermo Bulb Clamp Mtg.	4	4	4	4	4	4
	635160	Nut - Thermo Bulb Clamp Mtg.	4	4	4	4	4	4
	EA-112239	Clamp - Expansion Valve Mtg.	2	2	2	2	2	2
	641155	Screw - Expansion Valve Clamp Mtg.	4	4	4	4	4	4
	EA-79481	Washer - Expansion Valve Clamp Mtg. (Lock)	4	4	4	4	4	4
8		Valve - Solenoid (See Page 26)	1	1	1	1	1	-
	EB-72258	Bracket - Solenoid Valve Mtg.	1	1	1	-	1	-
	EA-118367	Bracket - Solenoid Valve Mtg.	-	-	-	-	-	-
	EA-118239	Bracket - Solenoid Valve Mtg.	-	-	-	1	-	-
	EA-132901	Bracket - Solenoid Valve Mtg.	-	-	-	-	-	-
	5855741	Screw - Valve Bracket Mtg. (10-32 x 1/4 in.)	2	2	2	-	2	-
	EA-79481	Washer - Valve Bracket Mtg. (#10 Lock)	2	2	2	-	2	-
	EA-79520	Screw - Valve Bracket Mtg. (1/4 in. - 20 x 1/2 in.)	-	-	-	2	-	-
	EA-79407	Washer - Valve Bracket Mtg. (1/4 in. Lock)	-	-	-	2	-	-
	EA-79608	Screw - Valve Bracket Mtg. (1/4 in. - 20 x 5/8 in.)	-	-	-	-	-	-
	EA-79407	Washer - Valve Bracket Mtg. (1/4 in. Lock)	-	-	-	-	-	-
	EA-79489	Nut - Valve Bracket Mtg. (1/4 in. - 20)	-	-	-	-	-	-
	EA-79573	Screw - Solenoid Valve Mtg. (10-32 x 1/2 in.)	2	2	2	2	2	-
	EA-79481	Washer - Solenoid Valve Mtg. (#10 Lock)	2	2	2	2	2	-
	EA-79927	Nut - Solenoid Valve Mtg. (10-32)	2	2	2	2	2	-
9	EA-118275	Duct - Blower	-	1	-	-	-	1
	EA-118270	Duct - Blower	-	-	-	1	-	-
	EA-118357	Duct - Blower	1	-	-	-	1	-
	EA-133688	Duct - Blower	-	-	-	-	-	-
	EA-118335	Duct - Blower	-	-	1	-	-	-

(Continued on next page)

AIR CONDITIONING UNIT (DIRECT DRIVE) (Continued)

Illus. No.	Piece No.	Description	Quantity Per Unit EM-15528	EM-15531	EM-15606	EM-15685	EM-15714	EM-15724	EM-15816
10	ED-18018	Frame Assem. - Duct (Mt. on Coil)	1	1	-	1	-	-	1
	ED-15828	Frame Assem. - Duct (Mt. on Coil)	-	-	1	-	-	1	-
	ED-34162	Frame Assem. - Duct (Mt. on Coil)	-	-	-	-	1	-	-
11	EC-29911	Frame Assem. - Duct (Mt. on Blower)	2	2	-	-	-	-	2
	EB-28593	Frame Assem. - Duct (Mt. on Blower)	-	-	2	-	-	2	-
	EC-47052	Frame Assem. - Duct (Mt. on Blower)	-	-	-	2	-	-	-
	EC-47642	Frame Assem. - Duct (Mt. on Blower)	-	-	-	-	1	-	-
	EC-47032	Frame Assem. - Duct (Mt. on Blower)	-	-	-	-	-	-	-
	EA-79520	Screw - Frame Assem. to Blower Mtg.	24	24	-	24	14	-	24
	EA-79407	Washer - Frame Assem. to Blower Mtg. (Lock)	24	24	-	24	14	-	24
	EA-79489	Nut - Frame Assem. to Blower Mtg.	24	24	-	24	14	-	24
12	ED-18034	Frame Assem. - Blower Hsg. and Motor	1	1	-	-	-	-	1
	ED-15816	Frame Assem. - Blower Hsg. and Motor	-	-	1	-	-	-	-
	ED-18284	Frame Assem. - Blower Hsg. and Motor	-	-	-	1	-	-	-
	EC-47632	Frame Assem. - Blower Hsg. and Motor	-	-	-	-	1	-	-
	ED-34324	Frame Assem. - Blower Hsg. and Motor	-	-	-	-	-	1	-
13	ED-18035	Housing Assem. - Blower	2	2	-	-	-	-	2
	ED-14604	Housing Assem. - Blower	-	-	2	-	-	2	-
	ED-18279	Housing Assem. - Blower	-	-	-	2	-	-	-
	ED-34316	Housing Assem. - Blower	-	-	-	-	1	-	-
	ED-18276	Housing Assem. - Blower	-	-	-	-	-	-	-
	93650	Screw - Blower Housing to Frame Assem. Mtg. (3/8 in. - 16 x 7/8 in. Hex Hd.)	8	8	6	4	2	6	8
	5413720	Washer - Blower Housing to Frame Assem. Mtg. (3/8 in. Lock)	8	8	-	8	2	-	8
	616473	Washer - Blower Housing to Frame Assem. Mtg. (3/8 in. Lock)	-	-	6	-	-	6	-
	93249	Washer - Blower Housing to Frame Assem. Mtg. (Plain)	8	8	6	8	2	12	8
	EA-132760	Screw - Blower Housing to Frame Assem. Mtg. (3/8 in. - 16 x 7/8 Round Hd.) (Inside)	-	-	-	4	-	-	-
	EB-71981	Lip - Blower	2	2	-	-	-	-	2
	EB-26756	Lip - Blower	-	-	2	-	-	2	-
	EC-47037	Lip - Blower	-	-	-	2	-	-	-
	EB-72274	Lip - Blower	-	-	-	-	-	-	-
	EB-49634	Lip - Blower	-	-	-	-	1	-	-
	EB-49632	Louvre - Blower	-	-	-	-	3	-	-
	EA-77343	Screw - Blower Lip Mtg. (1/4 in. - 20 x 1/2 in.)	10	10	-	10	-	-	10
	621186	Washer - Blower Lip Mtg. (1/4 in. Plain)	10	10	-	4	2	-	10
	629432	Washer - Blower Lip Mtg. (1/4 in. Lock)	10	10	4	10	8	4	10
	624011	Nut - Blower Lip Mtg. (1/4 in. - 20)	10	10	-	10	8	-	10
	619497	Screw - Blower Lip Mtg. (1/4 in. - 20 x 5/8 in.)	-	-	4	-	-	4	-
	95689	Nut - Blower Lip Mtg. (1/4 in. - 20)	-	-	4	-	-	4	-
	621819	Washer - Blower Lip Mtg. (1/4 in. Plain)	-	-	4	-	-	4	-
	5414150	Screw - Blower Lip and Louvre Mtg. (1/4 in. - 20 x 1/2 in.)	-	-	-	-	8	-	-
14	EB-71982	Support - Blower Housing	4	4	-	-	-	-	4
	EB-26754	Support - Blower Housing (Inside)	-	-	2	-	-	2	-
	EB-70276	Support - Blower Housing (Outside) (L.H.)	-	-	1	-	-	1	-
	EB-70277	Support - Blower Housing (Outside) (R.H.)	-	-	1	-	-	1	-
	EB-49625	Support - Blower Housing	-	-	-	-	1	-	-
	EA-77343	Screw - Support to Housing Mtg. (1/4 in. - 20 x 1/2 in.)	12	12	-	-	8	-	12
	624011	Nut - Support to Housing Mtg. (1/4 in. - 20)	12	12	-	-	8	-	12
	629432	Washer - Support to Housing Mtg. (1/4 in. Lock)	12	12	-	-	8	-	12
	621835	Screw - Support to Housing Mtg. (1/4 in. - 20 x 5/8 in.)	-	-	10	-	-	10	-
	90575	Washer - Support to Housing Mtg. (Plain)	-	-	10	-	-	10	-
	616474	Washer - Support to Housing Mtg. (1/4 in. Lock)	-	-	10	-	-	10	-
	624011	Nut - Support to Housing Mtg. (1/4 in. - 20)	-	-	10	-	-	10	-
15	EC-47872	Wheel - Blower	2	2	-	-	-	-	2
	EC-24791	Wheel - Blower	-	-	2	-	-	2	-

 (Continued on next page)

AIR CONDITIONING UNIT (DIRECT DRIVE) (Continued)

Illus. No.	Piece No.	Description	Quantity Per Unit EM-15830	EM-16048	EM-16053	EM-16057	EM-16071	EM-16099
10	ED-18018	Frame Assem. - Duct (Mt. on Coil)	1	1	1	-	1	1
	ED-15828	Frame Assem. - Duct (Mt. on Coil)	-	-	-	1	-	-
	ED-34162	Frame Assem. - Duct (Mt. on Coil)	-	-	-	-	-	-
11	EC-29911	Frame Assem. - Duct (Mt. on Blower)	-	2	-	-	-	2
	EC-28593	Frame Assem. - Duct (Mt. on Blower)	-	-	-	2	-	-
	EC-47052	Frame Assem. - Duct (Mt. on Blower)	2	-	-	-	2	-
	EC-47642	Frame Assem. - Duct (Mt. on Blower)	-	-	-	-	-	-
	EC-47032	Frame Assem. - Duct (Mt. on Blower)	-	-	2	-	-	-
	EA-79520	Screw - Frame Assem. to Blower Mtg.	24	24	20	-	24	24
	EA-79407	Washer - Frame Assem. to Blower Mtg. (Lock)	24	24	20	-	24	24
	EA-79489	Nut - Frame Assem. to Blower Mtg.	24	24	20	-	24	24
12	ED-18034	Frame Assem. - Blower Hsg. and Motor	-	1	1	-	-	1
	ED-15816	Frame Assem. - Blower Hsg. and Motor	-	-	-	1	-	-
	ED-18284	Frame Assem. - Blower Hsg. and Motor	1	-	-	-	1	-
	EC-47632	Frame Assem. - Blower Hsg. and Motor	-	-	-	-	-	-
	ED-34324	Frame Assem. - Blower Hsg. and Motor	-	-	-	-	-	-
13	ED-18035	Housing Assem. - Blower	-	2	-	-	-	2
	ED-14604	Housing Assem. - Blower	-	-	-	2	-	-
	ED-18279	Housing Assem. - Blower	2	-	-	-	2	-
	ED-34316	Housing Assem. - Blower	-	-	-	-	-	-
	ED-18276	Housing Assem. - Blower	-	-	2	-	-	-
	93650	Screw - Blower Housing to Frame Assem. Mtg. (3/8 - 16 x 7/8 Hex. Hd.)	4	8	8	6	4	8
	5413720	Washer - Blower Housing to Frame Assem. Mtg. (3/8 in. Lock)	8	8	8	-	8	8
	616473	Washer - Blower Housing to Frame Assem. Mtg. (3/8 in. Lock)	-	-	-	6	-	-
	93249	Washer - Blower Housing to Frame Assem. Mtg. (Plain)	8	8	8	6	8	8
	EA-132760	Screw - Blower Housing to Frame Assem. Mtg. (3/8 in. - 16 x 7/8 in. Round Hd.) (Inside)	4	-	-	-	4	-
	EB-71981	Lip - Blower	-	2	-	-	-	2
	EB-26756	Lip - Blower	-	-	-	2	-	-
	EC-47037	Lip - Blower	2	-	-	-	2	-
	EB-72274	Lip - Blower	-	-	2	-	-	-
	EB-49634	Lip - Blower	-	-	-	-	-	-
	EB-49632	Louvre - Blower	-	-	-	-	-	-
	EA-77343	Screw - Blower Lip Mtg. (1/4 in. - 20 x 1/2 in.)	10	10	10	-	10	10
	621186	Washer - Blower Lip Mtg. (Plain)	4	10	10	-	4	10
	629432	Washer - Blower Lip Mtg. (1/4 in. Lock)	10	10	10	4	10	10
	624011	Nut - Blower Lip Mtg. (1/4 in. - 20)	10	10	10	-	10	10
	619497	Screw - Blower Lip Mtg. (1/4 in. - 20 x 5/8 in.)	-	-	-	4	-	-
	95689	Nut - Blower Lip Mtg. (1/4 in. - 20)	-	-	-	4	-	-
	621819	Washer - Blower Lip Mtg. (Plain)	-	-	-	4	-	-
	5414150	Screw - Blower Lip and Louvre Mtg. (1/4 in. - 20 x 1/2 in.)	-	-	-	-	-	-
14	EB-71982	Support - Blower Housing	-	4	4	-	-	4
	EB-26754	Support - Blower Housing (Inside)	-	-	-	2	-	-
	EB-70276	Support - Blower Housing (Outside) (L.H.)	-	-	-	1	-	-
	EB-70277	Support - Blower Housing (Outside) (R.H.)	-	-	-	1	-	-
	EB-49625	Support - Blower Housing	-	-	-	-	-	-
	EA-77343	Screw - Support to Housing Mtg. (1/4 in. - 20 x 1/2 in.)	-	12	12	-	-	12
	624011	Nut - Support to Housing Mtg. (1/4 in. - 20)	-	12	12	-	-	12
	629432	Washer - Support to Housing Mtg. (1/4 in. Lock)	-	12	12	-	-	12
	621835	Screw - Support to Housing Mtg. (1/4 in. - 20 x 5/8 in.)	-	-	-	10	-	-
	90575	Washer - Support to Housing Mtg. (Plain)	-	-	-	10	-	-
	616474	Washer - Support to Housing Mtg. (1/4 in. Lock)	-	-	-	10	-	-
	624011	Nut - Support to Housing Mtg. (1/4 in. - 20)	-	-	-	10	-	-
15	EC-28511	Wheel - Blower	-	2	-	-	-	2
	EC-24791	Wheel - Blower	-	-	-	2	-	-

 (Continued on next page)

AIR CONDITIONING UNIT (DIRECT DRIVE) (Continued)

Illus. No.	Piece No.	Description	Quantity Per Unit EM-15528	EM-15531	EM-15606	EM-15685	EM-15714	EM-15724	EM-15816
15	(Continued)								
	EC-47869	Wheel - Blower	-	-	-	2	-	-	-
	EC-47611	Wheel - Blower	-	-	-	-	1	-	-
	EC-26608	Wheel - Blower	-	-	-	-	-	-	-
16	EA-44788	Shaft - Extension	2	2	-	2	-	-	2
	5441800	Screw - Extension Shaft (Set)	4	4	-	4	-	-	4
17		Motor - Blower (See Page 25)	1	1	1	1	1	1	1
	638499	Screw - Blower Motor Mtg. (1/2 in. - 13 x 1 3/4 in.)	4	4	-	4	-	-	-
	EA-72592	Washer - Blower Motor Mtg. (1/2 in. Lock)	4	4	-	4	-	-	-
	616341	Screw - Blower Motor Mtg. (3/8 in. - 16 x 1 3/8 in.)	-	-	4	-	4	-	-
	5413720	Washer - Blower Motor Mtg. (3/8 in. Lock)	-	-	4	-	4	-	-
	642664	Screw - Blower Motor Mtg. (1/2 in. - 13 x 1 1/2 in.)	-	-	-	-	-	4	4
	639800	Washer - Blower Motor Mtg. (1/2 in. Lock)	-	-	-	-	-	4	4
18	EB-71980	Rail - Frame Mtg.	2	2	-	2	-	-	2
	EB-28589	Rail - Frame Mtg.	-	-	2	-	-	2	-
	EB-49626	Rail - Frame Mtg. (R.H.)	-	-	-	-	1	-	-
	EB-49627	Rail - Frame Mtg. (L.H.)	-	-	-	-	1	-	-
	EB-23849	Pad - Rail Mtg. (Rubber)	2	2	-	2	2	-	2
	EB-28592	Pad - Rail Mtg. (Rubber)	-	-	2	-	-	2	-
19	5414022	Bushing - Rail Mtg. (Rubber)	6	6	6	6	6	6	6
	EA-44778	Washer - Rail Mtg. (Plain)	6	6	6	6	6	6	6
	EA-71348	Screw - Rail Mtg. (5/16 in. - 18 x 2 1/4 in.)	6	6	-	6	6	-	6
	60150	Nut - Rail Mtg. (5/16 in. - 18)	12	12	12	12	12	12	12
	634426	Screw - Rail Mtg. (5/16 in. - 18 x 1 7/8 in.)	-	-	6	-	-	6	-

AIR CONDITIONING UNIT (DIRECT DRIVE) (Continued)

Illus. No.	Piece No.	Description	Quantity Per Unit EM-15830	EM-16048	EM-16053	EM-16057	EM-16071	EM-16099
15	(Continued)							
	EC-47869	Wheel - Blower	2	-	-	-	2	-
	EC-47611	Wheel - Blower	-	-	-	-	-	-
	EC-26608	Wheel - Blower	-	-	2	-	-	-
16	EA-44788	Shaft - Extension	2	2	2	-	2	2
	5441800	Screw - Extension Shaft Mtg. (Set)	4	4	4	-	4	4
17		Motor - Blower (See Page 25)	1	1	1	1	1	1
	638499	Screw - Blower Motor Mtg. (1/2 in. - 13 x 3/4 in.)	4	4	4	-	4	4
	EA-72592	Washer - Blower Motor Mtg. (1/2 in. Lock)	4	4	4	-	4	4
	616341	Screw - Blower Motor Mtg. (3/8 in. - 16 x 1 3/8 in.)	-	-	-	4	-	-
	5413720	Washer - Blower Motor Mtg. (3/8 in. Lock)	-	-	-	4	-	-
	642664	Screw - Blower Motor Mtg. (1/2 in. - 13 x 1 1/2 in.)	-	-	-	-	-	-
	639800	Washer - Blower Motor Mtg. (1/2 in. Lock)	-	-	-	-	-	-
18	EB-71980	Rail - Frame Mtg.	2	2	2	-	2	2
	EB-28589	Rail - Frame Mtg.	-	-	-	2	-	-
	EB-49626	Rail - Frame Mtg.	-	-	-	-	-	-
	EB-49627	Rail - Frame Mtg.	-	-	-	-	-	-
	EB-23849	Pad - Rail Mtg. (Rubber)	2	2	2	-	2	2
	EB-28592	Pad - Rail Mtg. (Rubber)	-	-	-	2	-	-
19	5414022	Bushing - Rail Mtg. (Rubber)	6	6	6	6	6	6
	EA-44778	Washer - Rail Mtg. (Plain)	6	6	6	6	6	6
	EA-71348	Screw - Rail Mtg. (5/16 in. - 18 x 2 1/4 in.)	6	6	6	-	6	6
	60150	Nut - Rail Mtg. (5/16 in. - 18)	12	12	12	12	12	12
	634426	Screw - Rail Mtg. (5/16 in. - 18 x 1 7/8 in.)	-	-	-	6	-	-

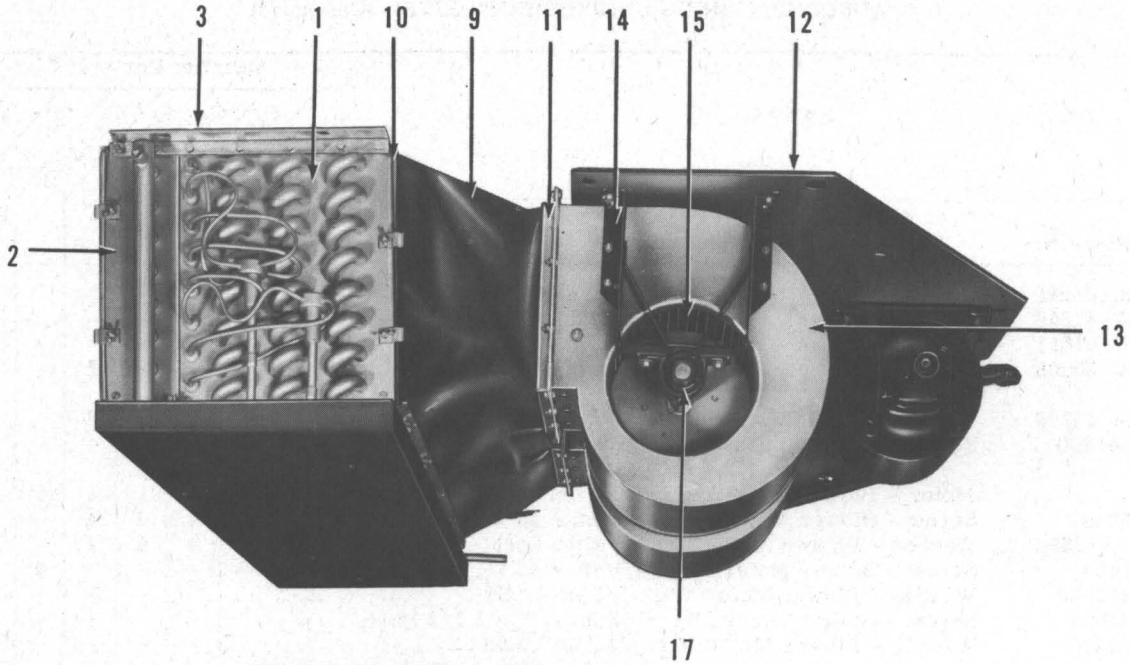

Typical Air Conditioning Unit (Belt Driven - Distributor End View)

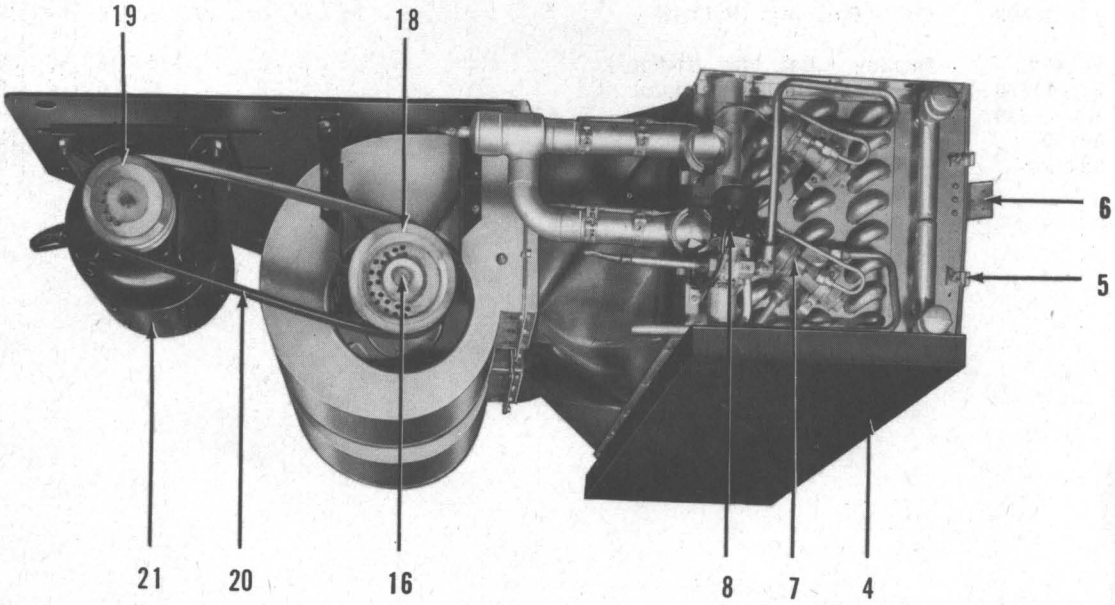

Typical Air Conditioning Unit (Belt Driven - Valve End View)

1. Cooling coil and parts
2. Steam coil and mtg. parts
3. Cover and duct retainer and mtg. parts
4. Drain and drip pans and mtg. parts
5. Duct clip and mtg. parts
6. Switch bracket and mtg. parts
7. Expansion valve and mtg. parts
8. Solenoid valve and mtg. parts
9. Blower duct
10. Blower duct frame (Large)
11. Blower housing frame and mtg. parts (Small)
12. Blower housing and motor frame
13. Blower housing, lip and mtg. parts
14. Bracket and mtg. parts (Outside and Inside)
15. Blower wheel
16. Shaft
17. Bearing and mtg. parts
18. Pulley (blower shaft)
19. Pulley (motor shaft)
20. Belt
21. Motor

AIR CONDITIONING UNITS--(BELT DRIVEN)
Parts Information

Illus. No.	Piece No.	Description	Quantity Per Unit EM-15611	EM-15666	EM-16076	EM-16086
1	EM-15730	Coil Assem. - Cooling	1	-	1	-
	EM-15668	Coil Assem. - Cooling	-	1	-	-
	EM-16073	Coil Assem. - Cooling	-	-	-	1
	EB-72093	Baffle - Center	1	1	1	1
	625303	Rivet - Center Baffle Mtg.	2	2	2	2
2	EM-16784	Coil Assem. - Steam	1	-	1	-
	EM-16067	Coil Assem. - Steam	-	-	-	1
	EM-15699	Eliminator Assem.	-	1	-	-
	EA-118142	Screw - Steam Coil Mtg. (5/16 in. - 18 x 3/4 in.)	4	-	4	4
	EA-79408	Washer - Steam Coil Mtg. (5/16 in. Lock)	4	-	4	4
	EA-118142	Screw - Eliminator Mtg. (5/16 in.- 18 x 3/4 in.)	-	4	-	-
	EA-79408	Washer - Eliminator Mtg. (5/16 in.Lock)	-	4	-	-
3	EC-47077	Cover and Duct Retainer Assem.	1	-	1	-
	ED-34258	Cover and Duct Retainer Assem.	-	1	-	-
	EB-72280	Cover and Duct Retainer Assem.	-	-	-	1
	EB-72247	Angle - Coil Mtg. (L.H.)	1	1	1	1
	EB-72248	Angle - Coil Mtg. (R.H.)	1	1	1	1
	EA-118142	Screw - Angle Mtg.	10	10	10	10
	EA-79408	Washer - Angle Mtg. (Lock)	10	10	10	10
	EA-79460	Nut - Angle Mtg.	10	10	10	10
	EA-132060	Wire - Tie (Cover Hold Down)	3	3	3	3
	EA-134999	Rod Assem. - Cover Retaining (Optional)	1	1	1	1
4	ED-34364	Pan - Drain	1	-	1	-
	ED-34387	Pan - Drain	-	1	-	-
	ED-18296	Pan - Drain	-	-	-	1
	EA-130655	Screw - Pan Mtg. (3/8 in. - 24 x 1 in.)	4	4	4	4
	ED-18248	Pan - Cooling Coil Drip	1	-	1	1
	EA-133758	Nut - Drip Pan (Wing)	5	-	5	5
	ED-34251	Pan - Cooling Coil Drip	-	1	-	-
	EA-133758	Nut - Drip Pan (Wing)	-	5	-	-
	EA-118140	Screw - Drip Pan Mtg. (1/4 in. 20 x 1/2 in.)	10	10	10	10
	EA-79407	Washer - Drip Pan Mtg. (1/4 in. Lock)	10	10	10	10
	622420	Screw - Baffle to Pan Mtg. (10-32 x 1/4 in.)	2	2	2	2
	EA-79481	Washer - Baffle to Pan Mtg. (#10 Lock)	2	2	2	2
	ED-18247	Pan - Steam Coil Drip	1	-	1	-
	EA-133758	Nut - Drip Pan (Wing)	5	-	5	-
	EB-72281	Pan - Steam Coil Drip	-	-	-	1
	EB-49532	Pan - Eliminator Drip	-	1	-	-
	EA-118140	Screw - Drip Pan Mtg. (1/4 in. 20 x 1/2 in.)	6	6	6	6
	EA-79407	Washer - Drip Pan Mtg. (1/4 in. Lock)	6	6	6	6
	EA-118142	Screw - Pull Coils and Drip Pans Together (5/16 in. - 18 x 3/4 in.)	2	2	2	2
	EA-79408	Washer - Pull Coils and Drip Pans Together (5/16 in. Lock)	2	2	2	2
5	EA-117368	Clip - Duct	8	4	8	4
	EA-79407	Washer - Duct Clip Mtg. (Lock)	8	4	8	4
	EA-79925	Washer - Duct Clip Mtg. (Plain)	8	4	8	4
	EA-79959	Nut - Duct Clip Mtg	8	4	8	4
6	EA-118194	Bracket - Thermo Switch	1	-	1	-
	626170	Screw - Switch Bracket Mtg.	3	-	3	-
	EA-79481	Washer - Switch Bracket Mtg. (Lock)	3	-	3	-
7	1130902	Valve - Expansion (Model MX49ECC) (See Page 26 for parts)	2	2	2	2
	5442177	Clamp - Thermo Bulb	4	4	4	4
	613545	Screw - Thermo Bulb Clamp Mtg.	4	4	4	4

(Continued on next page)

AIR CONDITIONING UNITS - (BELT DRIVEN) (Continued)

Illus. No.	Piece No.	Description	Quantity Per Unit EM-15611	EM-15666	EM-16076	EM-16086
7	1130902 (Continued)					
	635160	Nut - Thermo Bulb Clamp Mtg.	4	4	4	4
	EA-112239	Clamp - Exp. Valve Mtg.	2	-	2	2
	EA-133992	Clamp - Exp. Valve Mtg.	-	2	-	-
	641155	Screw - Exp. Valve Clamp Mtg.	4	4	4	4
	EA-79481	Washer - Exp. Valve Clamp Mtg. (Lock)	4	4	4	4
8		Valve - Solenoid (See Page 26)	1	-	1	1
	EB-72258	Bracket - Solenoid Valve Mtg.	1	-	1	-
	EA-118367	Bracket - Solenoid Valve Mtg.	-	-	-	1
	622420	Screw - Valve Bracket Mtg.	2	-	2	2
	EA-79481	Washer - Valve Bracket Mtg. (Lock)	2	-	2	2
	EA-79573	Screw - Solenoid Valve Mtg.	2	-	2	2
	EA-79481	Washer - Solenoid Valve Mtg. (Lock)	2	-	2	2
	EA-79927	Nut - Solenoid Valve Mtg.	2	-	2	2
9	EA-118377	Duct - Blower	1	-	1	1
	EA-133352	Duct - Blower	-	1	-	-
10	ED-18018	Frame Assem. - Duct (Mt. on Coil)	1	-	1	1
	EC-47541	Frame Assem. - Duct (Mt. on Coil)	-	1	-	-
11	EC-47052	Frame Assem. - Duct (Mt. on Blower)	2	-	2	2
	EC-47543	Frame Assem. - Duct (Mt. on Blower)	-	2	-	-
	EA-79520	Screw - Mt. Frame Assem. to Blower	24	24	24	24
	EA-79407	Washer - Mt. Frame Assem. to Blower (Lock)	24	24	24	24
	EA-79489	Nut - Mt. Frame Assem. to Blower	24	24	24	24
12	ED-16861	Frame Assem. - Blower Housing and Motor	1	-	-	1
	ED-34256	Frame Assem. - Blower Housing and Motor	-	1	-	-
	ED-18328	Frame Assem. - Blower Housing and Motor	-	-	1	-
13	ED-18292	Housing Assem. - Blower	2	-	2	2
	ED-34255	Housing Assem. - Blower	-	2	-	-
	EC-47037	Lip - Blower	2	-	2	2
	EC-47689	Lip - Blower	-	2	-	-
	5414150	Screw - Blower Lip Mtg.	10	10	10	10
	621186	Washer - Blower Lip Mtg. (Plain)	4	4	4	4
	629432	Washer - Blower Lip Mtg. (Lock)	10	10	10	10
	624011	Nut - Blower Lip Mtg.	10	10	10	10
14	EC-47452	Bracket - Blower Housing and Bearing Mtg. (Outside)	2	2	2	2
	634940	Screw - Bracket to Base Mtg. (3/8 in. - 16 x 3/4 in.)	8	8	8	8
	5413720	Washer - Bracket to Base Mtg. (3/8 in. Lock)	8	8	8	8
	96592	Nut - Bracket to Base Mtg. (3/8 in. - 16)	8	8	-	8
	5414150	Screw - Bracket to Housing Mtg. (1/4 in. - 20 x 1/2 in.)	8	8	8	8
	629432	Washer - Bracket to Housing Mtg. (1/4 in. Lock)	8	8	8	8
	624011	Nut - Bracket to Housing Mtg. (1/4 in. - 20)	8	8	8	8
	EB-29554	Bracket - Blower Housing (Inside)	2	2	2	2
	634940	Screw - Bracket to Base Mtg. (3/8 in. - 16 x 3/4 in.)	4	4	4	4
	93249	Washer - Bracket to Base Mtg. (Plain)	4	4	4	4
	5413720	Washer - Bracket to Base Mtg. (3/8 in. Lock)	4	4	4	4
	96592	Nut - Bracket to Base Mtg. (3/8 in. - 16)	4	4	-	4
	5414150	Screw - Bracket to Housing Mtg. (1/4 in. - 20 x 1/2 in.)	8	8	8	8
	629432	Washer - Bracket to Housing Mtg. (1/4 in. Lock)	8	8	8	8
	624011	Nut - Bracket to Housing Mtg. (1/4 in. - 20)	8	8	8	8

 (Continued on next page)

AIR CONDITIONING UNITS - (BELT DRIVEN) (Continued)

Illus. No.	Piece No.	Description	Quantity Per Unit EM-15611	EM-15666	EM-16076	EM-16086
15	EC-47870	Wheel - Blower	2	-	2	2
	EC-48364	Wheel - Blower	-	2	-	-
	1064096	Key - Blower Wheel Mtg.	2	2	2	2
16	EC-27874	Shaft - Blower	1	-	1	1
	EB-49531	Shaft - Blower	-	1	-	-
17	EA-79842	Bearing - Blower Shaft	2	2	2	2
	635231	Screw - Blower Shaft Bearing Mtg. (3/8 in. - 16 x 1 1/4 in.)	4	4	4	4
	93249	Washer - Blower Shaft Bearing Mtg. (Plain)	4	4	4	4
	5413720	Washer - Blower Shaft Bearing Mtg. (3/8 in. Lock)	4	4	4	4
	640588	Nut - Blower Shaft Bearing Mtg. (3/8 in. - 16)	4	4	4	4
	1149194	Nipple - Mt. in Bearing	2	2	2	2
18		Pulley - (Mt. on Blower Shaft) (See Below)	1	1	1	1
	EA-78191	Screw - Pulley Mtg. (Set)	2	2	2	2
	5414269	Key - Pulley Mtg.	1	1	1	1
19		Pulley - (Mt. on Motor Shaft) (See Below)	1	1	1	1
	EA-78191	Screw - Pulley Mtg. (Set)	2	2	2	2
20	635234	Belt	2	2	2	2
21		Motor (See Page 25)	1	1	1	1
	638499	Screw - Motor Mtg. (1/2 in. - 13 x 1 3/4 in.)	4	-	-	4
	640601	Washer - Motor Mtg. (Plain)	4	-	-	4
	EA-72592	Washer - Motor Mtg. (1/2 in. Lock)	4	4	4	4
	90465	Nut - Motor Mtg. (1/2 in. - 13)	4	4	4	4
	EA-133340	Screw - Motor Mtg. (1/2 in. - 13 x 1 1/2 in.)	-	4	-	-
	EA-133113	Screw - Motor Mtg. (1/2 in. - 13 x 2 in.)	-	-	4	-

MOUNTING PARTS NOT ILLUSTRATED

EA-79526	Screw - Unit to Car Mtg.	5	5	5	5
EA-79527	Bushing - Unit to Car Mtg. (Rubber)	10	10	10	10
EA-79525	Washer - Unit to Car Mtg.	5	5	5	5
EA-79524	Nut - Unit to Car Mtg.	5	5	5	5
EA-79523	Pin - Unit to Car Mtg. (Cotter)	5	5	5	5

PULLEY DATA

635600	Pulley - Blower Shaft (7 1/4 in.)	1	1	1	1
636794	Pulley - Blower Shaft (6 in.)	1	-	1	1
635560	Pulley - Motor Shaft (6 5/8 in.)	1	1	1	1
5441574	Pulley - Motor Shaft (5 in.)	1	-	-	1

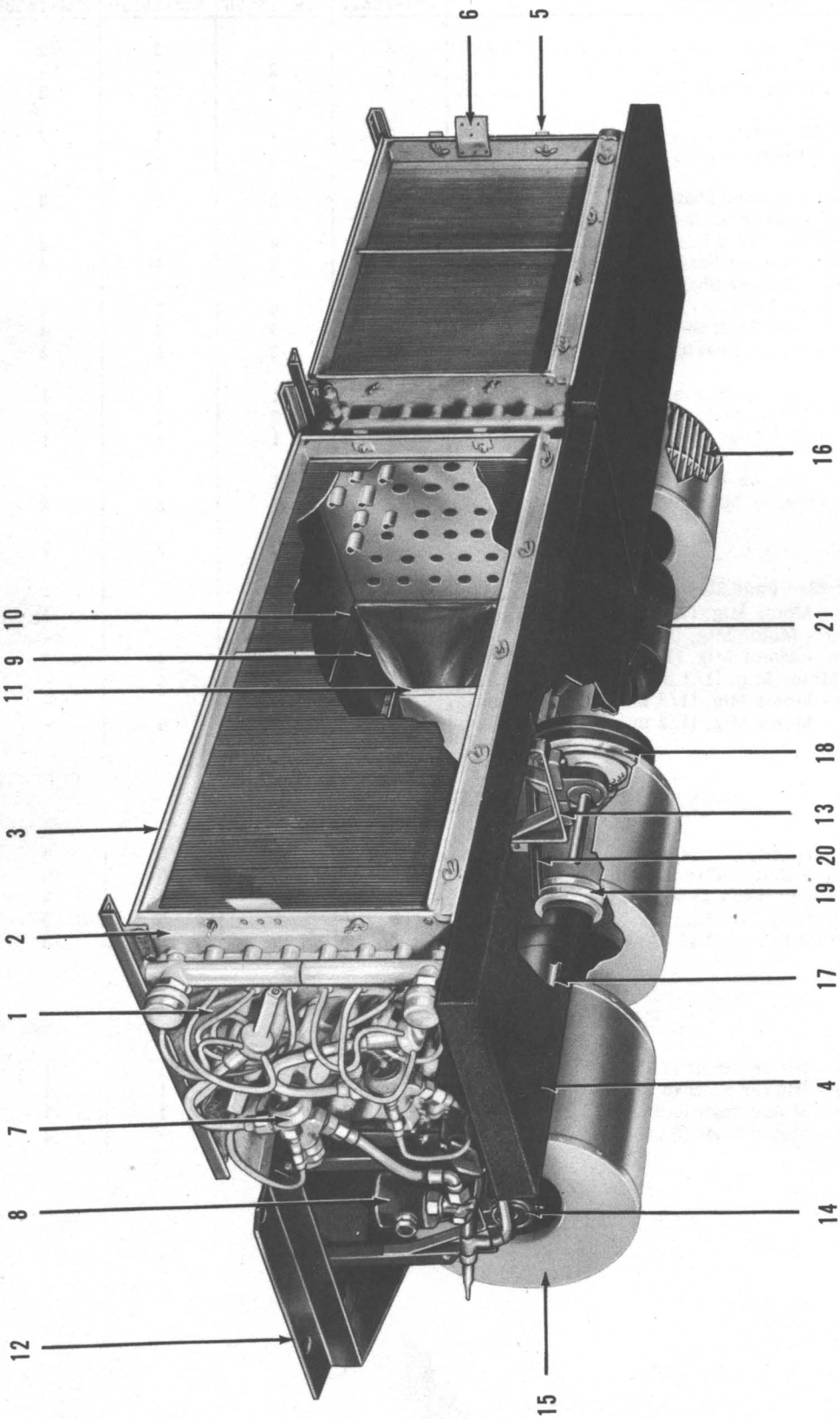

1. Cooling coil and parts
2. Steam coil and mtg. parts
3. Cover, angles and mtg. parts
4. Drain and drip pans and mtg. parts
5. Duct clip and mtg. parts
6. Switch bracket and mtg. parts
7. Expansion valve and parts
8. Solenoid valve and parts
9. Blower duct
10. Blower duct frame (Large)
11. Blower housing frame and mtg. parts (Small)
12. Blower housing and motor frame
13. Blower housing and bearing mtg. bracket and parts
14. Bearing
15. Blower housing, lip and mtg. parts
16. Blower wheel
17. Extension shaft
18. Pulley (Blower shaft)
19. Pulley (Motor shaft)
20. Belt
21. Motor and mtg. parts

Typical Air Conditioning Unit (Dual)

AIR CONDITIONING UNITS--(DUAL)
Parts Information

Illus. No.	Piece No.	Description	Quantity Per Unit EM-15589	EM-15707	EM-15731	EM-16113
1	EM-15618	Coil Assem. - Cooling (L.H.) (3 1/2 Ton)	1	-	-	-
	EM-15715	Coil Assem. - Cooling (L.H.) (4 Ton)	-	1	-	-
	EM-15771	Coil Assem. - Cooling (R.H.) (4 Ton)	-	-	1	-
	EM-16121	Coil Assem. - Cooling (R.H.) (4 Ton)	-	-	-	1
	EB-49449	Baffle - Center	1	1	1	1
	625303	Rivet - Baffle Mtg.	2	2	2	2
	EM-15645	Coil Assem. - Cooling (R.H.) (3 1/2 Ton)	1	-	-	-
	EM-15711	Coil Assem. - Cooling (R.H.) (6 Ton)	-	1	-	-
	EM-15768	Coil Assem. - Cooling (L.H.) (6 Ton)	-	-	1	-
	EM-16119	Coil Assem. - Cooling (L.H.) (6 Ton)	-	-	-	1
	EB-49449	Baffle - Center	1	-	-	-
	EB-72093	Baffle - Center	-	1	1	1
	625303	Rivet - Baffle Mtg.	2	2	2	2
2	EM-18633	Coil Assem. - Steam (L.H.) (3 1/2 - 4 Ton)	1	1	-	-
	EM-18632	Coil Assem. - Steam (R.H.) (4 Ton)	-	-	1	1
	EA-118142	Washer - Steam Coil Mtg. (Lock)	4	4	4	4
	EA-79408	Washer - Steam Coil Mtg. (Lock)	4	4	4	4
	EM-18632	Coil Assem. - Steam (R.H.) (3 1/2 Ton)	1	-	-	-
	EM-18634	Coil Assem. - Steam (R.H.) (6 Ton)	-	1	-	-
	EM-18635	Coil Assem. - Steam (L.H.) (6 Ton)	-	-	1	1
	EA-118142	Screw - Steam Coil Mtg.	4	4	4	4
	EA-79408	Washer - Steam Coil Mtg. (Lock)	4	4	4	4
3	EC-47415	Cover and Duct Retainer Assem. (Mt. with Angles) (3 1/2 - 4 Ton)	1	1	1	1
	EC-47532	Angle - Cooling Coil Mtg. (R.H.)	1	1	1	1
	EC-47533	Angle - Cooling Coil Mtg. (L.H.)	1	1	1	1
	EA-118142	Screw - Angle Mtg.	10	10	10	10
	EA-79408	Washer - Angle Mtg. (Lock)	10	10	10	10
	EA-79460	Nut - Angle Mtg.	10	10	10	10
	EA-132060	Wire - Tie (Cover Hold Down)	2	2	2	2
	EA-134999	Rod Assem. - Cover Retaining (Cover Mtg.) (Optional)	1	1	1	1
	EC-47415	Cover and Duct Retainer Assem. (Mt. with Angles) (3 1/2 Ton)	1	-	-	-
	EC-47414	Cover and Duct Retainer Assem. (Mt. with Angles) (6 Ton)	-	1	1	1
	EC-47532	Angle - Cooling Coil Mtg.	1	1	1	1
	EC-47533	Angle - Cooling Coil Mtg.	1	1	1	1
	EA-118142	Screw - Angle Mtg.	10	10	10	10
	EA-79408	Washer - Angle Mtg. (Lock)	10	10	10	10
	EA-79460	Nut - Angle Mtg.	10	10	10	10
	EA-132060	Wire - Tie (Cover Hold Down)	2	3	3	3
	EA-134999	Rod Assem. - Cover Retaining (Cover Mtg.) (Optional)	1	1	1	1
4	ED-34142	Pan - Drain (3 1/2 - 4 Ton)	1	1	-	-
	ED-34201	Pan - Drain (4 Ton)	-	-	1	1
	EA-130655	Screw - Drain Pan Mtg.	4	4	4	4
	ED-34201	Pan - Drain (3 1/2 Ton) (R.H.)	1	-	-	-
	ED-34144	Pan - Drain (6 Ton)	-	1	-	-
	ED-34409	Pan - Drain (6 Ton)	-	-	1	1
	EA-130655	Screw - Drain Pan Mtg.	4	4	4	4
	ED-34101	Pan - Cooling Coil Drip (3 1/2 - 4 Ton)	1	1	1	1
	EA-133758	Nut - Drip Pan (Wing)	4	4	4	4
	EA-118140	Screw - Cooling Coil Drip Pan Mtg. (1/4 in. - 20 x 1/2 in.)	10	10	10	10

(Continued on next page)

AIR CONDITIONING UNITS (DUAL) (Continued)

Illus. No.	Piece No.	Description	Quantity Per Unit EM-15589	EM-15707	EM-15731	EM-16113
4 (Continued)						
	EA-79407	Washer - Cooling Coil Drip Pan Mtg. (Lock)	10	10	10	10
	626170	Screw - Baffle to Pan Mtg. (10-32 x 3/8 in.)	2	-	-	-
	EA-79481	Washer - Baffle to Pan Mtg. (#10 Lock) . . .	2	2	2	2
	622420	Screw - Baffle to Pan Mtg. (10-32 x 1/4 in.) .	-	2	2	2
	ED-34101	Pan - Cooling Coil Drip (3 1/2 Ton)	1	-	-	-
	EA-133758	Nut - Drip Pan (Wing)	4	-	-	-
	ED-34147	Pan - Cooling Coil Drip (6 Ton)	-	1	1	1
	EA-133758	Nut - Cooling Coil	-	5	5	5
	EA-118140	Screw - Cooling Coil Drip Pan Mtg. (1/4 in. - 20 x 1/2 in.)	10	10	10	10
	EA-79407	Washer - Cooling Coil Drip Pan Mtg. (1/4 in. Lock)	10	10	10	10
	626170	Screw - Baffle to Pan Mtg. (10-32 x 3/8 in.) .	2	-	-	-
	EA-79481	Washer - Baffle to Pan Mtg. (#10 Lock) . . .	2	2	2	2
	622420	Screw - Baffle to Pan Mtg. (10-32 x 1/4 in.) .	-	2	2	2
	ED-34099	Pan - Steam Coil Drip (3 1/2 - 4 Ton)	1	1	1	1
	EA-133758	Nut - Drip Pan (Wing)	4	4	4	4
	EA-118140	Screw - Steam Coil Drip Pan Mtg. (1/4 in. - 20 x 1/2 in.)	6	6	6	6
	EA-79407	Washer - Steam Coil Drip Pan Mtg. (1/4 in. Lock)	6	6	6	6
	EA-118142	Screw - Pull Coils and Pans together (5/16 in. - 18 x 3/4 in.)	2	2	2	2
	EA-79408	Washer - Pull Coil and Pans together (5/16 in. Lock)	2	2	2	2
	ED-34099	Pan - Steam Coil Drip (3 1/2 Ton)	1	-	-	-
	EA-133758	Nut - Drip Pan (Wing)	4	-	-	-
	ED-34161	Pan - Steam Coil Drip (6 Ton)	-	1	1	1
	EA-133758	Nut - Drip Pan (Wing)	-	5	5	5
	EA-118140	Screw - Steam Coil Drip Pan Mtg. (1/4 in. - 20 x 1/2 in.)	6	6	6	6
	EA-79407	Washer - Steam Coil Drip Pan Mtg. (1/4 in. Lock)	6	6	6	6
	EA-118142	Screw - Pull Coils and Pans together (5/16 in. - 18 x 3/4 in.)	2	2	2	2
	EA-79408	Washer - Pull Coils and Pans together (5/16 in. Lock)	2	2	2	2
5	EA-117368	Clip - Duct (3 1/2 - 4-6 Ton)	16	16	16	16
	EA-79407	Washer - Duct Clip Mtg. (Lock)	16	16	16	16
	EA-77959	Nut - Duct Clip Mtg. (Wing)	16	16	16	16
	EA-79925	Washer - Duct Clip Mtg. (Plain)	16	16	16	16
6	EA-118194	Bracket - Thermo Switch (3 1/2 - 4-6 Ton) .	2	2	2	2
	626170	Screw - Thermo Switch Bracket Mtg.	6	6	6	6
	EA-79841	Washer - Thermo Switch Bracket Mtg. (Lock)	6	6	6	6
7	1130902	Valve - Expansion (MX-49-ECC) (See Page 26 for parts)	2	4	4	4
	5442177	Clamp - Thermo Bulb Mtg.	4	8	8	8
	613545	Screw - Thermo Bulb Clamp Mtg.	4	8	8	8
	635160	Nut - Thermo Bulb Clamp Mtg.	4	8	8	8
	EA-112239	Clamp - Exp. Valve Mtg.	2	4	4	4
	641155	Screw - Exp. Valve Clamp Mtg.	4	8	8	8
	EA-79481	Washer - Exp. Valve Clamp Mtg. (Lock) . .	4	8	8	8
	EA-133992	Bracket - Exp. Valve Mtg. (4-6 Ton)	-	4	4	4
	629712	Screw - Exp. Valve Bracket Mtg.	-	8	8	8
	EA-79481	Washer - Exp. Valve Bracket Mtg. (Lock) . .	-	8	8	8
	EA-132902	Spacer - Exp. Valve Bracket Mtg.	-	8	8	8
8		Solenoid Valve (See Page 25) (3 1/2 - 4-6 Ton)	2	2	2	2
	EA-118367	Bracket - Solenoid Valve Mtg. (3 1/2 Ton) .	2	-	-	-
	626170	Screw - Solenoid Valve Bracket Mtg.	4	-	-	-

 (Continued on next page)

AIR CONDITIONING UNITS (DUAL) (Continued)

Illus. No.	Piece No.	Description	Quantity Per Unit EM-15589	EM-15707	EM-15731	EM-16113
8	(Continued)					
	EA-79481	Washer - Solenoid Valve Bracket Mtg. (Lock)	4	-	-	-
	EA-137539	Bracket - Solenoid Valve Mtg. (4-6 Ton) . .	-	2	2	2
	EA-79608	Screw - Solenoid Valve Bracket Mtg.	-	4	4	4
	EA-79407	Washer - Solenoid Valve Bracket Mtg. (Lock)	-	4	4	4
	EA-79489	Nut - Solenoid Valve Bracket Mtg.	-	4	4	4
	EA-79573	Screw - Solenoid Valve Mtg. (3 1/2 - 4-6 Ton)	4	4	4	4
	EA-79481	Washer - Solenoid Valve Mtg. (Lock)	4	4	4	4
	EA-79927	Nut - Solenoid Valve Mtg.	4	4	4	4
9	EA-133119	Duct - Blower (L.H.) (3 1/2 Ton)	1	-	-	-
	EA-133120	Duct - Blower (R.H.) (3 1/2 Ton)	1	-	-	-
	EA-133688	Duct - Blower (4 Ton)	-	1	-	-
	EA-133859	Duct - Blower (4 Ton)	-	-	1	1
	EA-132922	Duct - Blower (6 Ton)	-	1	1	1
10	ED-34162	Frame Assem. - Blower Duct (Mt. on Coil) (3 1/2 - 4 Ton)	2	1	1	1
	ED-34157	Frame Assem. - Blower Duct (Mt. on Coil) (6 Ton)	-	1	1	1
11	EC-29911	Frame Assem. - Blower Duct (Mt. on Blower) (3 1/2 Ton)	1	-	-	-
	EC-47642	Frame Assem. - Blower Duct (Mt. on Blower) (4 Ton)	-	1	1	1
	EA-79520	Screw - Frame Assem. to Blower Mtg. . . .	10	14	14	14
	EA-79407	Washer - Frame Assem. to Blower Mtg. (Lock)	10	14	14	14
	EA-79489	Nut - Frame Assem. to Blower Mtg.	10	14	14	14
	EC-29911	Frame Assem. - Blower Duct (Mt. on Blower) (3 1/2 Ton)	1	-	-	-
	EC-47052	Frame Assem. - Blower Duct (Mt. on Blower) (6 Ton)	-	2	2	2
	EA-79520	Screw - Frame Assem. to Blower Mtg. . . .	10	24	24	24
	EA-79407	Washer - Frame Assem. to Blower Mtg. (Lock)	10	24	24	24
	EA-79489	Nut - Frame Assem. to Blower Mtg.	10	24	24	24
12	ED-18034	Frame Assem. - Blower Housing and Motor (3 1/2 Ton)	1	-	-	-
	EC-47632	Frame Assem. - Blower Housing and Motor (4 Ton)	-	1	-	-
	EC-47662	Frame Assem. - Blower Housing and Motor (4 Ton)	-	-	1	1
	ED-34298	Frame Assem. - Blower Housing and Motor (6 Ton)	-	1	-	-
	ED-34331	Frame Assem. - Blower Housing and Motor (6 Ton)	-	-	1	1
13	EC-47452	Bracket - Blower Housing and Bearing Mtg. (Outside) (6 Ton)	-	2	2	2
	5414150	Screw - Bracket to Housing Mtg. (1/4 in. 20 x 1/2 in.)	-	8	8	8
	629432	Washer - Bracket to Housing Mtg. (1/4 in. Lock)	-	8	8	8
	624011	Nut - Bracket to Housing Mtg. (1/4 in. - 20)	-	8	8	8
	634940	Screw - Bracket to Base Mtg. (3/8 in. - 16 x 3/4 in.)	-	8	8	8
	5413720	Washer - Bracket to Base Mtg. (3/8 in. Lock)	-	8	8	8
	96592	Nut - Bracket to Base Mtg. (3/8 in. - 16) . .	-	8	8	8
	EB-29554	Bracket - Blower Housing (Inside) (6 Ton) .	-	2	2	2
	5414150	Screw - Bracket to Housing Mtg. (1/4 in. - 20 x 1/2 in.)	-	8	8	8
	629432	Washer - Bracket to Housing Mtg. (1/4 in. Lock)	-	8	8	8

(Continued on next page)

AIR CONDITIONING UNITS (DUAL) (Continued)

Illus. No.	Piece No.	Description	Quantity Per Unit EM-15589	EM-15707	EM-15731	EM-16113
13	(Continued)					
	624011	Nut - Bracket to Housing Mtg. (1/4 in. - 20)	-	8	8	8
	634940	Screw - Bracket to Base Mtg. (3/8 in. - 16 x 3/4 in.)	-	4	4	4
	93249	Washer - Bracket to Base Mtg. (Plain)	-	4	4	4
	5413720	Washer - Bracket to Base Mtg. (3/8 in. Lock)	-	4	4	4
	96592	Nut - Bracket to Base Mtg. (3/8 in. - 16)	-	4	4	4
14	EA-79842	Bearing - Blower Shaft (6 Ton)	-	2	2	2
	635231	Screw - Blower Shaft Bearing Mtg.	-	4	4	4
	93249	Washer - Blower Shaft Bearing Mtg. (Plain)	-	4	4	4
	5413720	Washer - Blower Shaft Bearing Mtg. (Lock)	-	4	4	4
	640588	Nut - Blower Shaft Bearing Mtg.	-	4	4	4
	1149194	Nipple - Mt. in Bearing	-	2	2	2
15	ED-18035	Housing Assem. - Blower (3 1/2 Ton)	2	-	-	-
	ED-34316	Housing Assem. - Blower (4 Ton)	-	1	1	1
	ED-18292	Housing Assem. - Blower (6 Ton)	-	2	2	2
	93650	Screw - Blower Housing to Frame Assem. Mtg.	8	2	2	2
	5413720	Washer - Blower Housing to Frame Assem. Mtg. (Lock)	8	2	2	2
	93249	Washer - Blower Housing to Frame Assem. Mtg. (Plain)	8	2	2	2
	EB-71981	Lip - Blower (3 1/2 Ton)	2	-	-	-
	EB-49634	Lip - Blower (4 Ton)	-	1	1	1
	EB-49632	Louvre - Blower (4 Ton)	-	3	3	3
	EC-47037	Lip - Blower (6 Ton)	-	2	2	2
	EA-77343	Screw - Blower Lip Mtg. (1/4 in. - 20 x 1/2 in.)	10	-	-	-
	5414150	Screw - Blower Lip Mtg. (1/4 in. - 20 x 1/2 in.)	-	18	18	18
	621186	Washer - Blower Lip Mtg. (Plain)	10	6	6	6
	629432	Washer - Blower Lip Mtg. (1/4 in. Lock)	10	18	18	18
	624011	Nut - Blower Lip Mtg.	10	18	18	18
16	EC-28511	Wheel - Blower (3 1/2 Ton)	2	-	-	-
	EC-47611	Wheel - Blower (4 Ton)	-	1	-	-
	EC-47721	Wheel - Blower (4 Ton)	-	-	1	-
	EC-48286	Wheel - Blower (4 Ton)	-	-	-	1
	EC-47870	Wheel - Blower (6 Ton)	-	2	2	2
	1064096	Key - Blower Wheel Mtg.	-	2	2	2
17	EA-44788	Shaft - Extension (3 1/2 Ton)	2	-	-	-
	EB-49624	Shaft - Blower (6 Ton)	-	1	-	-
	EC-27874	Shaft - Blower (6 Ton)	-	-	1	1
	5441800	Screw - Extension Shaft Mtg. (Set)	4	-	-	-
18	636794	Pulley (6 in.) Mt. on Blower Shaft (6 Ton)	-	1	1	1
	5414269	Key - Pulley Mtg.	-	1	1	1
	EA-78191	Screw - Pulley Mtg. (Set)	-	2	2	2
19	635560	Pulley (6 5/8 in.) Mt. on Motor Shaft (6 Ton)	-	1	1	1
	EA-78191	Screw - Pulley Mtg. (Set)	-	2	2	2
20	635645	Belt 49 in. - (6 Ton)	-	2	2	2
21		Motor - (3 1/2 Ton) (See Page 25)	1	-	-	-
		Motor - (4 Ton) (See Page 25)	-	1	1	1
		Motor - (6 Ton) (See Page 25)	-	1	1	1
	638499	Screw - Motor Mtg. (1/2 in. - 13 x 1 3/4 in.) (3 1/2 Ton)	4	-	-	-
	EA-72592	Washer - Motor Mtg. (1/2 in. Lock) (3 1/2 Ton)	4	-	-	-
	616341	Screw - Motor Mtg. (3/8 in. - 16 x 1 3/8 in.) (4 Ton)	-	4	4	4
	5413720	Washer - Motor Mtg. (3/8 in. Lock) (4 Ton)	-	4	4	4
	638499	Screw - Motor Mtg. (1/2 in. - 13 x 1 3/4 in.) (6 Ton)	-	4	4	4

 (Continued on next page)

AIR CONDITIONING UNITS (DUAL) (Continued)

Illus. No.	Piece No.	Description	Quantity Per Unit EM-15589	EM-15707	EM-15731	EM-16113
21	(Continued)					
	640601	Washer - Motor Mtg. (Plain) (6 Ton)	-	4	4	4
	EA-72592	Washer - Motor Mtg. (1/2 in. Lock) (6 Ton)	-	4	4	4
	90465	Nut - Motor Mtg. (1/2 in. - 13) (6 Ton) . .	-	4	4	4

PARTS NOT ILLUSTRATED

EB-71982	Support - Blower Housing (3 1/2 Ton) . . .	4	-	-	-
EB-49625	Support - Blower Housing (4 Ton)	-	1	1	1
EA-77343	Screw - Support to Housing Mtg. (1/4 in. - 20 x 1/2)	12	-	-	-
5414150	Screw - Support to Housing Mtg. (1/4 in. - 20 x 1/2)	-	8	8	8
624011	Nut - Support to Housing Mtg.	12	8	8	8
629432	Washer - Support to Housing Mtg. (Lock) .	12	8	8	8
EB-71980	Rail - Frame Mtg. (3 1/2 Ton)	2	-	-	-
EB-49627	Rail - Frame Mtg. (4 Ton)	-	1	1	1
EB-49626	Rail - Frame Mtg. (4 Ton)	-	1	1	1
EB-23849	Pad - Rail Mtg. (Rubber) (3 1/2 -4 Ton) . .	2	2	2	2
5414022	Bushing - Rail Mtg. (Rubber)	6	6	6	6
EA-71348	Screw - Rail Mtg.	6	6	6	6
EA-44778	Washer - Rail Mtg. (Plain)	6	6	6	6
60150	Nut - Rail Mtg.	12	12	12	12
EA-79527	Bushing - Unit to Car Mtg.	-	10	10	10
EA-79526	Screw - Unit to Car Mtg.	-	5	5	5
EA-79525	Washer - Unit to Car Mtg. (Plain)	-	5	5	5
EA-79524	Nut - Unit to Car Mtg.	-	5	5	5
EA-79523	Pin - Unit to Car Mtg. (Cotter)	-	5	5	5
EB-49524	Manifold Assem. (3 1/2 Ton)	1	-	-	-

AIR CONDITIONING UNITS--(FLOOR MOUNTED)

Parts Information

Cooling and Steam Coils

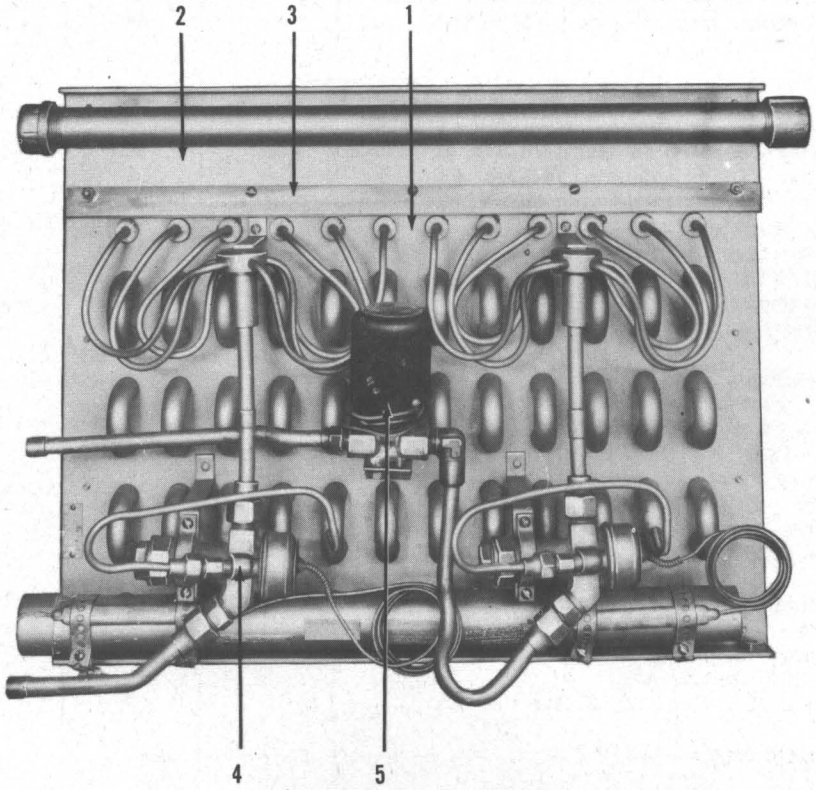

1. Cooling coil
2. Steam coil
3. Seal strip
4. Expansion valve
5. Solenoid valve

Typical Air Conditioning Unit (Floor Mounted - Cooling and Steam Coils)

Illus. No.	Piece No.	Description	Quantity Per Unit EM-15883	EM-15890	EM-16089
1	EM-15889	Coil Assem. - Cooling	1	-	-
	EM-15891	Coil Assem. - Cooling	-	1	-
	EM-16088	Coil Assem. - Cooling	-	-	1
	EC-27804	Cover - Cooling Coil - (Rear)	1	-	-
	EC-47927	Cover - Cooling Coil - (Front)	1	-	-
	EC-47938	Cover - Cooling Coil - (Rear)	-	1	-
	EC-47937	Cover - Cooling Coil - (Front)	-	1	-
	EC-27804	Cover - Cooling Coil	-	-	2
	EA-79961	Silencer - Coil Cover	2	-	2
	EA-134481	Silencer - Coil Cover	-	2	-
	622420	Screw - Coil Cover Mtg.	12	12	12
	EA-79481	Washer - Coil Cover Mtg. (Lock)	12	12	12
2	EM-15786	Coil Assem. - Steam	1	-	-
	EM-15915	Coil Assem. - Steam	-	1	-
	EM-12270	Coil Assem. - Steam	-	-	1
	622420	Screw - Cover to Steam Coil Mtg.	4	4	4
	EA-79481	Washer - Cover to Steam Coil Mtg. (Lock)	4	4	4
3	EB-29578	Strip - Seal (Mt. on Steam Coil)	2	2	2
	622420	Screw - Seal Strip Mtg. (10-32 x 1/4 in.)	6	6	6
	EA-79481	Washer - Seal Strip Mtg. (#10 Lock)	6	6	6
	626170	Screw - Cover Seal Strip Mtg. (10-32 x 3/8 in.)	4	4	-
	EA-79573	Screw - Cover Seal Strip Mtg. (10-32 x 1/2 in.)	-	-	4
	EA-79481	Washer - Cover Seal Strip Mtg. (#10 Lock)	4	4	4
	619078	Nut - Cover Seal Strip Mtg. (10-32)	4	4	-

AIR CONDITIONING UNITS (FLOOR MOUNTED) (Continued)
COOLING AND STEAM COILS

Illus. No.	Piece No.	Description	Quantity Per Unit EM-15883	EM-15890	EM-16089
3 (Continued)					
	EA-79927	Nut - Cover Seal Strip Mtg. (10-32)	-	-	4
	EA-49478	Wire - Tie (Cover Hold Down)	4	4	4
4	1130902	Valve - Expansion (MX-49-ECC) (See Page 26 for parts)	2	2	2
	5442177	Clamp - Thermo Bulb	4	4	4
	613545	Screw - Thermo Bulb Clamp Mtg.	4	4	4
	635160	Nut - Thermo Bulb Clamp Mtg.	4	4	4
	EA-112239	Clamp - Exp. Valve Mtg.	2	2	2
	641155	Screw - Exp. Valve Clamp Mtg.	4	4	4
	EA-79481	Washer - Exp. Valve Clamp Mtg.	4	4	4
5		Valve - Solenoid (See Page 26)	1	1	1
	EC-47921	Bracket - Solenoid and Exp. Valve Mtg.	1	1	-
	EA-118413	Bracket - Solenoid Valve Mtg.	-	-	1
	641155	Screw - Valve Bracket Mtg. (10-32 x 5/8 in.)	2	2	-
	626170	Screw - Valve Bracket Mtg. (10-32 x 3/8 in.)	-	-	2
	EA-79481	Washer - Valve Bracket Mtg. (#10 Lock)	2	2	2
	637295	Screw - Valve Bracket Mtg. (1/4 in. - 20 x 1/2 in.)	3	3	-
	629432	Washer - Valve Bracket Mtg. (1/4 in. Lock)	3	3	-
	EA-79573	Screw - Solenoid Valve Mtg.	2	2	2
	624469	Washer - Solenoid Valve Mtg. (3/8 in. Lock)	2	2	-
	EA-79481	Washer - Solenoid Valve Mtg. (#10 Lock)	-	-	2
	EA-79927	Nut - Solenoid Valve Mtg.	-	-	2

1. Blower housing and motor plate
2. Blower housing and parts
3. Bracket and mtg. parts
4. Blower wheel
5. Blower shaft
6. Bearing and mtg. parts
7. Pulley - (Blower shaft)
8. Pulley - (Motor shaft)
9. Belt
10. Motor and mtg. parts

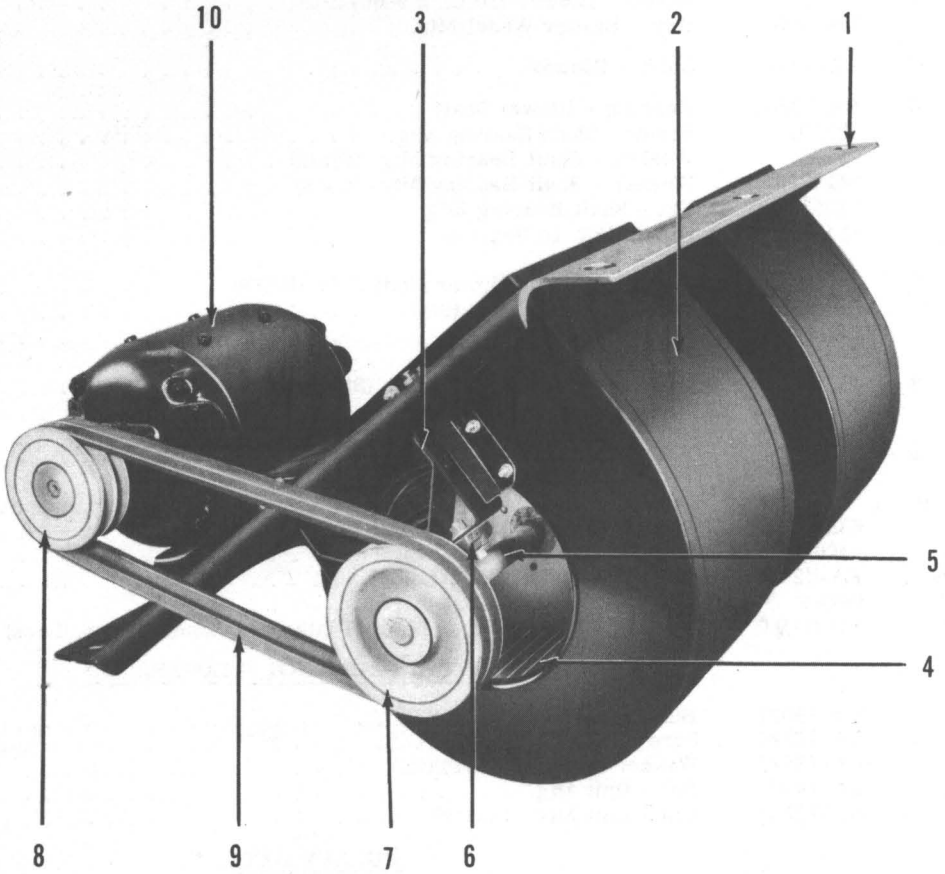

Air Conditioning Unit (Floor Mounted - Blower Unit)

AIR CONDITIONING UNITS--(FLOOR MOUNTED)
Parts Information
Blower Unit

Illus. No.	Piece No.	Description	Quantity Per Unit EM-15613
1	ED-16485	Plate - Blower Housing and Motor	1
2	ED-16480	Housing - Blower	2
	EB-29571	Lip - Blower	2
	619497	Screw - Blower Lip Mtg.	8
	621186	Washer - Blower Lip Mtg. (Plain)	8
	629432	Washer - Blower Lip Mtg. (Lock)	8
	624011	Nut - Blower Lip Mtg.	8
3	EC-47461	Bracket - Blower Housing and Bearing Mtg. (Outside)	2
	634940	Screw - Bracket to Plate Mtg. (3/8 in. - 16 x 3/4 in.)	8
	5413720	Washer - Bracket to Plate Mtg. (3/8 in. Lock)	8
	90260	Nut - Bracket to Plate Mtg. (3/8 in. - 16)	8
	621186	Washer - Bracket to Plate Mtg. (Plain)	8
	619497	Screw - Bracket to Housing Mtg. (1/4 in. - 20 x 5/8 in.)	8
	629432	Washer - Bracket to Housing Mtg. (1/4 in. Lock)	8
	624011	Nut - Bracket to Housing Mtg. (1/4 in. - 20)	8
	EB-29568	Bracket - Blower Housing (Inside)	2
	EA-72596	Screw - Bracket to Plate Mtg. (3/8 in. - 16 x 1/2 in.)	4
	93249	Washer - Bracket to Plate Mtg. (Plain)	4
	5413720	Washer - Bracket to Plate Mtg. (3/8 in. Lock)	4
	619497	Screw - Bracket to Housing Mtg. (1/4 in. - 20 x 5/8 in.)	8
	629432	Washer - Bracket to Housing Mtg. (1/4 in. Lock)	8
	621186	Washer - Bracket to Housing Mtg. (Plain)	8
	624011	Nut - Bracket to Housing Mtg.	8
4	EC-47870	Wheel - Blower (10 in. x 9 in.)	2
	1064096	Key - Blower Wheel Mtg.	2
5	EB-29663	Shaft - Blower	1
6	EA-79842	Bearing - Blower Shaft	2
	635231	Screw - Shaft Bearing Mtg.	4
	93249	Washer - Shaft Bearing Mtg. (Plain)	4
	5413720	Washer - Shaft Bearing Mtg. (Lock)	4
	640588	Nut - Shaft Bearing Mtg.	4
	1149194	Nipple (Mt. in Bearing)	2
7		Pulley - Mt. on Blower Shaft (See Below)	1
	EA-78191	Screw - Pulley Mtg. (Set)	2
	EA-74292	Key - Pulley Mtg.	1
8		Pulley - Mt. on Motor Shaft (See Below)	1
	EA-78191	Screw - Pulley Mtg. (Set)	2
9	635234	Belt - 51 in.	2
10		Motor - (See Page 25)	1
	638499	Screw - Motor Mtg.	4
	640601	Washer - Motor Mtg. (Plain)	4
	EA-72592	Washer - Motor Mtg. (Lock)	4
	90465	Nut - Motor Mtg.	4
	5413719	Washer - (Mt. between Motor Plates and Base) (3/4 in. Lock)	4
		MOUNTING PARTS NOT ILLUSTRATED	
	EA-79527	Bushing - Unit Mtg.	10
	EA-79526	Screw - Unit Mtg.	5
	EA-79525	Washer - Unit Mtg. (Plain)	5
	EA-79524	Nut - Unit Mtg.	5
	EA-79523	Pin - Unit Mtg. (Cotter)	5
		PULLEY DATA	
	635600	Pulley - Blower Shaft (7 1/4 in.)	1
	636794	Pulley - Blower Shaft (6 in.)	1
	635560	Pulley - Motor Shaft (6 5/8 in.)	1
	5441574	Pulley - Motor Shaft (5 in.)	1

AIR CONDITIONING UNIT MOTOR DATA

Motor Piece No.	H.P.	Voltage	RPM	Cycle	Phase	Type Bearing
A-7170 (Double Shaft)	1/2	30-DC	1200	--	-	Sleeve
A-7171 (Single Shaft)	1/2	30-DC	1200	--	-	Sleeve
A-7172 (CCW)	1/2	30-DC	1200	--	-	Sleeve
A-7173	1/2	60-DC	1200	--	-	Sleeve
A-7174 (CCW)	1	60-72-DC	1250-1750	--	-	Sleeve
A-7175	1/2	110-DC	1200	--	-	Sleeve
A-7176	1/2	72-DC	1250	--	-	Ball
A-7177	1/2	72-DC	1250	--	-	Ball
A-7180	1	220-AC	1725	60	3	Sleeve
A-7182	1	60-72-DC	1250-1750	--	-	Sleeve
A-7183	1	110-126-DC	1250-1750	--	-	Sleeve
A-7184	1	36-DC	1250	--	-	Ball
A-7185	1	72-DC	1250	--	-	Ball
A-7187 (CCW)	1	30-36-DC	1250-1750	--	-	Sleeve
A-7191	1	60-72-DC	1250-1750	--	-	Ball
A-7192 (Use A-7191)	1	60-72-DC	1250-1750	--	-	Ball
A-7193 (Use A-7191)	1	60-72-DC	1250-1750	--	-	Ball
A-7194	1	30-36-DC	1250-1750	--	-	Ball
A-7198 (CCW)	1	72-DC	1250	--	-	Ball
A-7199 (CCW)	1	110-126-DC	1250-1750	--	-	Ball
A-7585	1	220-AC	1140	60	3	Sleeve
A-7741	1/2	60-DC	1225	--	-	Sleeve
A-7746	1	110-126-DC	1250-1750	--	-	Sleeve
A-8307	1/2	60-DC	1225	--	-	Ball
A-8316	1	30-DC	1250	--	-	Ball
A-8318	1	30-DC	1250	--	-	Ball
A-8319	1	60-DC	1250	--	-	Ball
A-8321	1	30-DC	1250	--	-	Ball
A-8322	1	60-DC	1250	--	-	Ball
A-8323	1	110-DC	1250	--	-	Ball
I-693	1 1/4	115-AC	1170	60	3	Ball
I-938 (Short Shaft)	1	220-AC	1140	60	3	Ball
I-995 (Long Shaft)	1	220-AC	1140	60	3	Ball
I-948	1	220-AC	1725	60	3	Ball

REFER TO MOTOR SECTION FOR REPLACEMENT PARTS

SOLENOID VALVE DATA

Piece No.	Description
EA-118242	Valve - Solenoid (30-36 Volt DC)
EA-118193	Valve - Solenoid (60-72 Volt DC)
EA-118241	Valve - Solenoid (110 Volt AC)
EA-118249	Valve - Solenoid (110 Volt DC)
EA-155975	Valve - Solenoid (220 Volt AC)

COILS FOR SOLENOID VALVES

49864	Coil - Solenoid Valve (30-36 Volt DC)
49460	Coil - Solenoid Valve (60-72 Volt DC)
49568	Coil - Solenoid Valve (110 Volt AC)
49507	Coil - Solenoid Valve (110 Volt DC)
49964	Coil - Solenoid Valve (208 Volt AC)(For 220 Volt AC Application)

SURGE PREVENTOR FOR SOLENOID VALVES

(All Voltages)

EA-112687	Surge Preventor - Solenoid Valve

MODULEX VALVE REPLACEMENT PARTS

Piece No.	Description	1130818 MX-48-ECC	1130902 MX-49-ECC
1136308	Needle & Carrier Assem.	1	1
1137269	Body & Bellows Assem.	1	-
1137852	Body & Bellows Assem.	-	1
5442099	Packing - Adjusting Screw	1	1
5442100	Nut - Packing	1	1
5442157	Pin - Operating	3	3
5442159	Receiver - Adjusting Screw Packing	1	1
5442158	Spring - Adjusting	1	-
5444741	Spring - Adjusting	-	1
5442175	Screw - Adjusting	1	-
5442176	Nut - Adjusting	-	1
5442178	Seat - Needle	1	-
5444740	Seat - Needle	-	1
5442168	Cap - Seal	1	1
5442169	Gasket - Seal Cap	1	1
1137847	Connector Assem. - (Equalizer 1/4 in. P. x 1/4 in. Fl.)	-	1
5443757	Connector - Inlet (1/2 in.)	1	1

Section IV

MISCELLANEOUS ACCESSORIES

MISCELLANEOUS ACCESSORIES AND TOOLS

INTERCHANGERS

EM-16047	Interchanger (OS) (Outlet conn. on side)
EM-15723	Interchanger (NS) (Outlet conn. on end)

VALVE

1130715	Valve - ERV-31H

LIQUID FILTERS AND STRAINERS

EM-12255	Filter - Liquid 3/4 in. (Line connection)
EM-7120	Filter - Liquid 5/8 in. (Line connection)
EB-49620	Strainer - Liquid 7/8 in. (Line connection)
EB-49299	Strainer - "Y" (Line connection)
EA-132769	Valve - 2 way (Line connection)
1137532	Strainer - Liquid 3/4 in. Sweat (Coil connection)
EA-79334	Strainer - Liquid 1/2 in. Flare (Coil connection)

FLEXIBLE CONNECTION

EB-49225	Connection - Flexible 3/4 in.
EB-72261	Connection - Flexible 1 1/8 in.

FREON GAS

SA-7090	Gas (Freon-12) (33#)
5417713	Drum (35#)

OIL

1140915	Oil (1 Gal.) (300 Viscosity)
SA-3699	Oil (5 Gal.) (300 Viscosity)

MISCELLANEOUS ACCESSORIES (Continued)

RECOMMENDED LIST OF TOOLS FOR SERVICING FRIGIDAIRE RAILWAY AIR CONDITIONING EQUIPMENT

Piece No.	Description
SA-2136	Leak Detector
SA-3621	Methyl Alcohol
5418330	Compound Gauge
5418331	Pressure Gauge
5418429	Pocket Thermometer
SB-2014	Motor Pulley Puller
SB-2144	Flywheel Puller
SA-1034	12 Point Box Off-Set Wrench
SA-1037	End Wrench 3/4" x 7/8"
SA-1041	End Wrench 3/4" x 1"
SA-1318	End Wrench 1" x 1 1/8"
SA-1145	T-Handle Wrench 7/16"
SA-1144	T-Handle Wrench 1/2"
SA-1414	Packing Key Wrench (For Four Cylinder Compressor Body)
SA-1063	Ratchet Wrench
SA-1085	Allen Wrench 5/16"
SA-1086	Allen Wrench 3/8"
640000	Allen Wrench 1/4"
SA-1039	1/4" Valve Key (For Ratchet Wrench)
SA-1038	3/16" Valve Key (For Ratchet Wrench)
SA-2011	3/16" T-Handle Valve Key
SA-2012	1/4" T-Handle Valve Key
SA-2066	1/4" Universal Joint Valve Key
SA-1389	Condenser Valve Key
SA-2013	T-Handle Packing Nut Key
SA-1332	Packing Nut Key (For Hand Shut-Off Valve)
SA-1040	Packing Gland Key (For Ratchet Wrench)
5418398	Flare Tool
5418484	Tubing Cutter
SA-1609	Sight Glass Removing Tool
SA-10981	Sylphon Centering Tool (For Four Cylinder Compressor Body)
SA-1321	Freon Drum Fitting
SA-1322	Freon Drum Fitting Gasket
SA-3674	Sealing Compound

THE FOLLOWING ITEMS SHOULD BE PURCHASED LOCALLY

14" Pipe Wrench

Socket Wrench Set

Set of Open End Wrenches (3/8" to 1 1/4")

Set of Open End Box Wrenches

Section V

MOTORS

MODEL A-9391
MOTOR REPLACEMENT PARTS

(3/4 H.P., 72 Volt - DC, 1750 RPM)

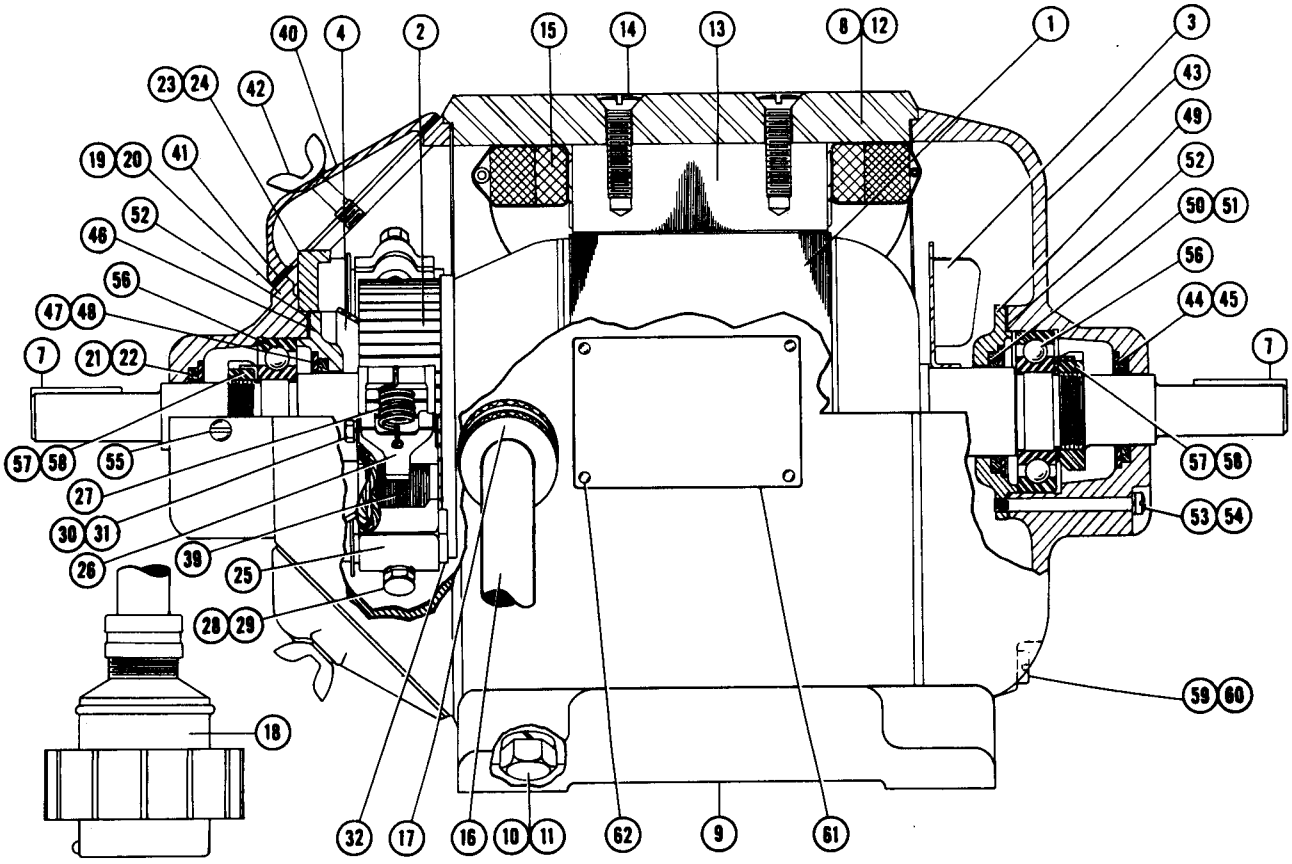

Illus. No.	Description	Quantity Per Unit	A-9391
1	Armature and Fan Assembly	1	5381102
2	Commutator Assembly	1	5319233
3	Fan	1	42243
4	Balance Disc	1	1072389
*5	Balance Weight	AR	38194
*6	Balance Weight	AR	38195
7	Key - Shaft Extension	1	42929
8	Base - Frame and Coil Assembly	1	5381172
9	Base	1	5334092
10	Bolt - Base Mounting	4	181698
11	Lockwasher - Base Mounting	4	103323
12	Frame	1	5381616
13	Pole Piece	2	42015
14	Screw - Pole Piece Mounting	4	1070426
15	Field Coil Assembly	1	5398606
16	Cable - Lead Assembly	1	5374483
17	Connector - Cable	1	5512632
18	Plug - Receptacle	1	1057998
19	End Frame and Brush Holder Assembly	1	5340347
20	End Frame	1	5331034
23	Brush Bracket and Holder Assembly	1	5396356
24	Bracket	1	5364174
25	Brush Holder	2	5312458

(Continued)

* Not Illustrated.

MOTOR REPLACEMENT PARTS (Continued)

Illus. No.	Description	Quantity Per Unit	A-9391
--	End Frame and Brush Holder Assembly (Continued)	1	5340347
--	Brush Bracket and Holder Assembly (Continued)	1	5396356
26	Arm - Brush Holder	2	5354004
27	Spring - Brush Arm	2	49835
28	Bolt - Brush Holder Clamp	2	1065723
29	Lockwasher - Brush Holder Clamp	2	103319
30	Screw - Brush and Field Lead Terminal	2	1065723
31	Lockwasher - Brush and Field Lead Terminal	2	106497
32	Insulator Tube - Brush Stud	2	5364170
*33	Bolt - Bracket Locking (Top)	1	187532
*34	Nut - Bracket Locking (Top)	1	120375
*36	Bolt - Bracket Locking (Bottom)	1	37972
*37	Nut - Bracket Locking (Bottom)	1	5337834
*38	Lockwasher - Bracket Locking (Bottom)	1	106497
39	Brush	2	5308736
40	Cover Plate - End Frame	2	5333077
41	Gasket - Cover Plate	2	5309450
42	Thumb Screw - Cover Plate	4	5306893
43	End Frame - Opposite Commutator End	1	5357156
44	Felt Seal	1	1079138
45	Washer - Seal Retaining	1	1070518
46	Bearing Cover - Commutator End	1	5351658
47	Felt Seal	1	1070514
48	Washer - Seal Retaining	1	1070537
49	Bearing Cover - Opposite Commutator End	1	5351659
50	Felt Seal	1	1070537
51	Washer - Seal Retaining	1	1070514
52	Gasket - Bearing Cover	2	5351655
53	Screw - Bearing Cover Mounting	6	132158
54	Lockwasher - Bearing Cover Mounting	6	106497
55	Pipe Plug - Bearing Reservoir	4	1062157
56	Ball Bearing	2	5379898
57	Locknut - Bearing	2	127709
58	Lockwasher - Bearing	2	127686
59	Thru Bolt - End Frame Mounting	2	1069190
60	Nut - Thru Bolt	2	42454
61	Name Plate	1	5365449
62	Drive Screw - Name Plate Retaining	4	5327153
--	Expansion Plug - Commutator End Frame	1	1053083

Printed in U.S.A.

* Not Illustrated.

MOTOR REPLACEMENT PARTS (Continued)

Illus. No.	Description	Quantity Per Unit	A-7157	A-7167	A-8100
66	Bearing	1	5364645	5364645	5364645
67	Washer, Brg. Spacer	1	5312203	5312203	5312203
68	Locknut, Bearing	1	5311754	5311754	5311754
69	Lockwasher, Bearing	1	1070039	1070039	1070039
70	Plug, End Frame Center	1	5381885	5381885	5381885
71	Gasket, Plug	1	043216	043216	043216
72	Pipe Plug, Brg. Reservoir	2	103883	103883	103883
73	End Frame & Brush Holder Assembly (Comm. End)	1	5393826	5393826	5388920
74	Bolt, End Frame Mounting	4	186679	186679	186679
75	Lockwasher, End Frame Mounting	4	120382	120382	120382
76	Washer, End Frame Mounting	4	5309587	5309587	5309587
77	Cover Plate Assembly	1	5393962	5393962	5393962
78	Spring, Cover Plate Retainer	4	5392974	5392974	5392974
79	Bolt, Retainer Spring	8	121887	121887	121887
80	Lockwasher, Retainer Spring	8	120380	120380	120380
81	Bearing Housing Assembly	1	5393743	5393743	5393743
82	Gasket, Bearing Housing	1	5312229	5312229	5312229
83	Screw, Bearing Housing Mounting	4	1057178	1057178	1057178
84	Lockwasher, Bearing Housing Mounting	4	120382	120382	120382
85	Felt Seal (Outer)	1	5324298	5324298	5324298
86	Washer, Seal Retainer (Outer)	1	5327756	5327756	5327756
87	Expan. Ring, Seal Retainer (Outer)	1	1078262	1078262	1078262
88	Felt Seal (Inner)	1	1079145	1079145	1079145
89	Washer, Seal Retainer (Inner)	1	5316993	5316993	5316993
90	Expan. Ring, Seal Retainer (Inner)	1	1078259	1078259	1078259
91	Bearing	1	5364645	5364645	5364645
92	Washer, Brg. Spacer	1	5312203	5312203	5312203
93	Locknut, Brg.	1	5311754	5311754	5311754
94	Lockwasher, Brg.	1	1070039	1070039	1070039
95	Pipe Plug, Brg. Reservoir	2	103883	103883	103883
96	Brush Holder & Spring Assembly	4	5393836	5393836	5388925
97	Spring, Brush Tension	8	5310593	5310593	5310593
98	Screw, Brush Lead Terminal	4	5396361	5396361	5396361
99	Lockwasher, Brush Lead Terminal	4	120217	120217	120217
100	Washer, Brush Lead Terminal	4	042663	042663	042663
101*	Screw, Brush Holder Clamp	8	5310598	5310598	5310598
102*	Locknut, Brush Holder Clamp	8	123479	123479	123479
103	Brush Holder Stud & Insulating Sleeve Assembly	4	5385684	5385684	5385684
104	Insulating Sleeve	4	5312128	5312128	5312128
105	Insulating Disc, Stud End	4	5317124	5317124	5317124
106	Expansion Plug, Disc Retainer	4	1070969	1070969	1070969
107	Insulating Washer, Brush Holder Stud (1/16 in. Mica)	4	5313422	5313422	5313422
108	Insulating Washer, Brush Holder Stud (1/16 in. Mica)	4	5312127	5312127	5312127
109	Insulating Washer, Brush Holder Stud (5/32 Fibre)	4	5386534	5386534	5386534
110	Spring Washer, Brush Holder Stud	4	5327711	5327711	5327711
111	Locknut, Brush Holder Stud	12	5308407	5308407	5308407
112	Terminal Clip, Brush Holder Stud	4	5393832	5393832	5393832
113*	Bolt, Terminal Clip Mounting	4	120834	120834	132315
114*	Nut, Terminal Clip Mounting	4	123437	123437	123437
115*	Lockwasher, Terminal Clip Mounting	4	120214	120214	120214
116	Brush	8	5388271	5388271	5388931
117	Cover Band & Baffle Assembly	1	5393862	5393862	5393862
118*	Gasket, Cover Band	1	5385746	5385746	5385746
119*	Cover Band & Clamp Assembly	1	5393863	5393863	5393863
120*	Gasket, Cover Band	1	5385747	5385747	5385747
121	Bolt, Cover Bands Mounting	4	1060327	1060327	1060327
122	Cover Band Assembly, Fan	1	5393866	5393866	5388935
123	Shaft, Mounting Pivot	1	5323788	5323788	5323788
124*	Bracket, Belt Tension Mech.	1	5393739	5393739	5393739
125*	Bolt, Bracket Mounting	3	122433	122433	122433
126*	Lockwasher, Bracket Mounting	3	120384	120384	120384
127*	Name Plate, A. C.	1	5310770	5310770	5310770
128*	Name Plate, D. C.	1	5365449	5365449	5365449
129*	Drive Screw, Name Plate	6	1061405	1061405	1061405

* - Not illustrated

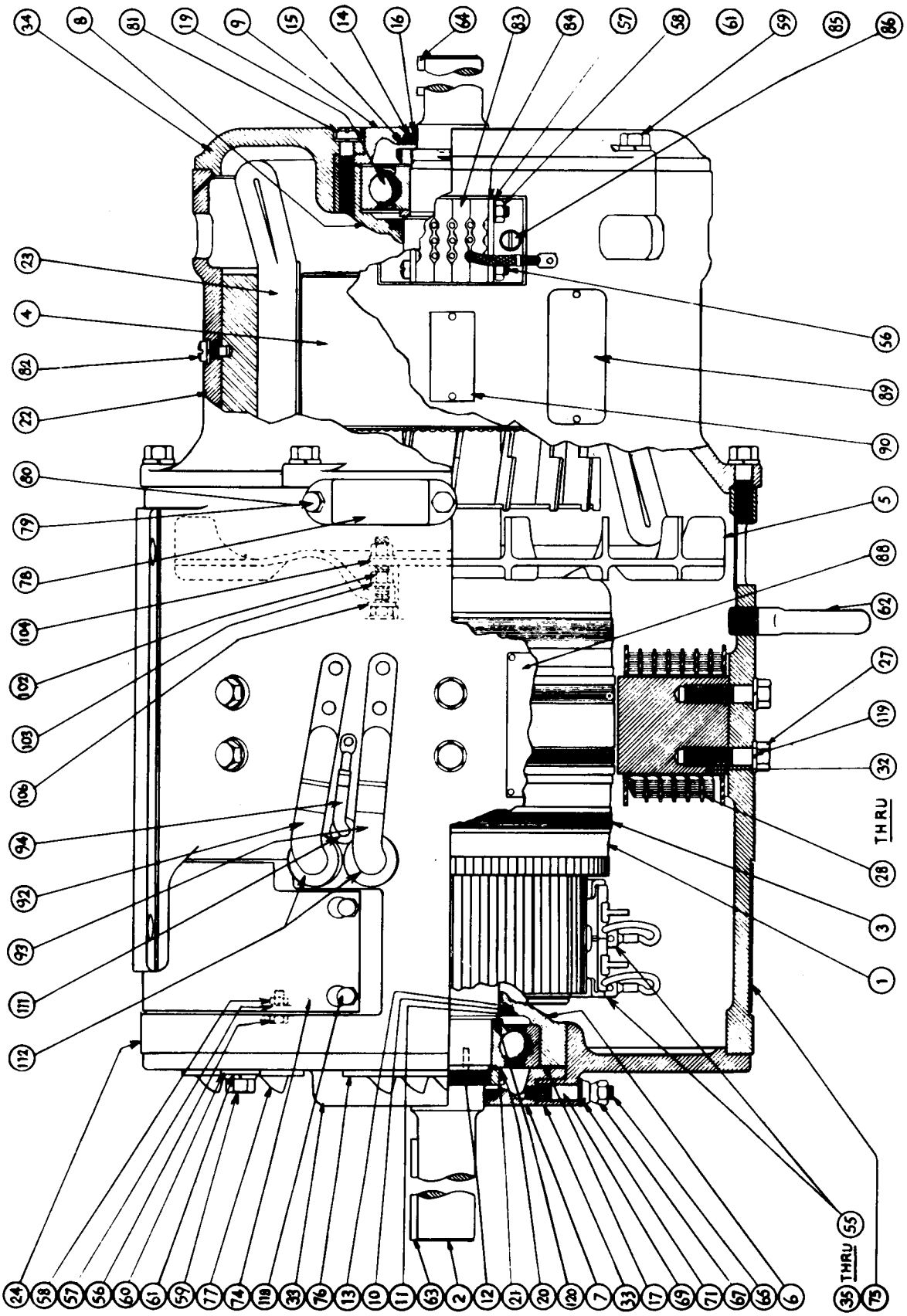
34
8
81
19
9
15
14
16
64
83
84
57
58
61
59
85
86
23
4
84
22
80
79
78
104
102
103
106
94
92
93
111
112
56
89
90
5
88
62
27
119
32
THRU
28
3
1
24
58
57
56
60
61
59
77
74
118
33
76
13
10
11
63
2
12
21
20
120
7
33
17
69
71
67
68
6
35
THRU
55
75

MODEL A-742

MOTOR REPLACEMENT PARTS

Illus. No.	Description	Quantity Per Unit	A-742
1	Armature (Rotor and Shaft Assy.)	1	5310130
2	Shaft Assembly	1	5312257
3	Armature	1	5310131
4	Rotor Assembly	1	5304397
5	Fan	1	5312258
6	Bearing Housing (D.C. End)	1	5312228
7	Bearing Cover	1	5317067
8	Bearing Housing (A.C. End)	1	5312227
9	Bearing Cover	1	5317069
10	Bearing Housing Felt Washer	2	1079145
11	Bearing Housing Expansion Ring	2	1078259
12	Bearing Housing Pin	4	5313570
13	Bearing Housing Retainer	2	5316993
14	Bearing Cover Felt Washer	2	1079146
15	Bearing Cover Expansion Ring	2	1078260
16	Bearing Cover Retainer	2	5316994
17	Bearing Cover Gasket	2	5312229
*18	Bearing Cover Screw	4	46097
19	Bearing (Ball)	2	1070043
20	Bearing Lock Washer	2	1070039
21	Bearing Lock Nut	2	5311754
22	Frame (A.C.)	1	5310491
23	Stator and Coil Assembly (A.C.)	1	5314585
24	Frame and Field Coil Assy. (D.C.)	1	5311472
*25	Mounting Rail	2	5308619
*26	Pole Piece Assy.	4	5317123
27	Pole Screw	16	1059757
28	Shunt Coil Assy.	4	1070695
29	Interpole Coil Assy.	1	5306151
30	Interpole Coil Assy.	1	5306153
31	Interpole Coil Assy.	1	5306155
32	Interpole Coil Assy.	1	5306157
33	End Frame (D.C. End) or (C.E.)	1	5317553
34	End Frame (A.C. End) or (Opp. C.E.)	1	5312259
35	Brush Holder and Brush	4	1071561
36	Brush Holder Mounting Screw	8	5310598
37	Brush Holder Check Nut	8	1064966
38	Brush Holder Lock Washer	8	47116
39	Brush Arm Spring	8	5306781
40	Brush	8	1070643
41	Brush Arm	8	5310595
42	Cotter Pin	4	42975
43	Brush Arm Pin	4	5310594
44	Brush Lead Screw	8	1065723
45	Brush Lead Screw Washer	8	42663
46	Brush Lead Screw Lock Washer	8	42512
47	Brush Holder Stud	4	5316998
48	Brush Holder Insul. Disc	4	5317124
49	Brush Holder Insul. Sleeve	4	5312128
50	Brush Holder Plug Expansion Plug	4	1070969
51	Brush Holder Stud Lock Nut	12	5308407
52	Brush Holder Stud Washer (Small)	4	5327711
53	Brush Holder Stud Washer (Medium)	4	5327712
54	Brush Holder Stud Insulation Washer	4	5312129
55	Brush Holder Stud Washer (Large)	8	5308519
56	Lead Holding Screw (A.C.)	4	1060977
57	Lead Holding Screw Lock Washer (A.C.)	4	42513
58	Lead Holding Screw Nut (A.C.)	4	5315047
59	End Frame Screw	14	1059757
60	End Frame Washer	4	5320523

(Continued on next page)

MOTOR REPLACEMENT PARTS (Continued)

Illus. No.	Description	Quantity Per Unit	A-742
61	End Frame Lock Washer	14	1058491
62	Eye Bolt	1	5314583
63	Key (D.C. End) or (C.E.)	1	1078936
64	Key (A.C. End) or (Opp. C.E.)	1	1078937
65	Pipe Plug	2	1062157
*66	Grease Nipple (A.C. End)	1	1075203
67	Grease Nipple (D.C. End)	1	5320882
*68	Grease Pipe (A.C. End)	1	5332727
69	Grease Pipe (D.C. End)	1	5332720
*70	Grease Pipe Nut	2	5319998
71	Grease Pipe Bushing	2	5312440
*72	Connector Assembly	1	5312253
*73	Connector Assembly	1	5312254
74	Cover Band (Upper)	1	5315771
75	Cover Band (Lower)	1	5315773
76	Cover Plate (Vertical)	2	5312397
77	Cover Plate (Horizontal)	2	5312399
78	Lead Clamp	1	5314584
79	Lead Clamp Lock Washer	11	47116
80	Lead Clamp Screw	2	1055341
81	Bearing Housing Screw	8	1057178
82	Stator Screw	1	1070245
83	A.C. Lead Clamp	4	5310492
84	A.C. Lead Bracket	2	5310493
85	A.C. Lead Bracket Screw	2	42918
86	A.C. Lead Bracket Lock Washer	4	42513
88	Name Plate (D.C.)	1	1057132
89	Name Plate (A.C.)	1	5310770
90	Connection Plate	1	5302198
*91	Escutcheon Pin	8	33979
92	Lead Assembly (A-1)	1	5300656
93	Lead Assembly (A-2)	1	5302788
94	Lead Assembly	1	5320883
95	Lead Assembly	3	1071563
*96	Lead Screw (Large)	4	5320884
*97	Lead Lock Washer (Large)	4	47116
*98	Lead Nut (Large)	4	1064996
*99	Lead Screw (Small)	4	5321076
*100	Lead Nut (Small)	4	38109
*101	Lead Lock Washer (Small)	4	42512
102	Fan Nut	12	5312255
103	Fan Lock Washer	12	47116
104	Armature Locking Ring	1	5316992
*105	Armature and Rotor Key	2	1078436
106	Fan Washer	6	1072027
*107	Interpole Support (Wood)	2	5305510
*108	Interpole Support (Wood)	1	5305511
*109	Interpole Support (Wood)	1	5305512
*110	Shunt Coil Spring Support	4	5316995
111	Rubber Lead Bushing (Small)	1	38601
112	Rubber Lead Bushing (Large)	2	5300658
*113	Lead Wedge	3	1056917
*114	Lead Lug	3	1056904
*115	Lead Lug Screw	3	49929
*116	Lead Lug Lock Washer	3	42513
118	Cover Band Screw	3	1060327
119	Pole Screw Lock Washer	16	1058491
120	Bearing Spacer	2	5312203

* - Not Illustrated

MOTOR REPLACEMENT PARTS

AC MOTOR MODEL I-687

Description	Quantity Per Unit	I-687
Rotor & Shaft Assembly	1	5395805
Key, Shaft Extension	1	1064311
Frame, Stator & Coil Assembly	1	5395807
Screw, Stator Locking	4	1070249
Lockwasher, Stator Locking	4	103321
Nipple, Lead Conduit	1	5395744
Pivot Shaft, Motor Suspension	1	5323788
Hanger, Safety	2	5395806
End Frame (Opp. Drive End)	1	5395564
Bolt, End Frame Mounting	4	5389907
Ball Bearing	1	5348415
Bearing Housing	1	5390364
Gasket, Bearing Housing	1	5389979
Screw, Bearing Housing Mtg.	4	5389409
Locknut, Bearing	1	1079611
Lockwasher, Bearing	1	1079610
Fan	1	1067865
Bolt, Fan Hub Locking	2	434383
Nut, Fan Hub Locking	2	042455
Lockwasher, Fan Hub Locking	2	103320
Cover, Fan	1	5387158
Bolt, Cover Mtg.	4	120854
Lockwasher, Cover Mtg.	4	103319
End Frame (Drive End)	1	5395745
Bolt, End Frame Mounting	4	215600
Lockwasher, End Frame Mounting	4	103322
Ball Bearing	1	5348416
Bearing Housing	1	5390131
Gasket, Bearing Housing	1	5390133
Screw, Bearing Housing Mtg.	4	5389409
Locknut, Bearing	1	1070038
Lockwasher, Bearing	1	1070039
Pipe Plug, Bearing Reservoir	4	1062157
Arrow, Rotation Indicating	1	5367210
Name Plate	1	5395563
Drive Screw, Arrow & Name Plate	5	1061405

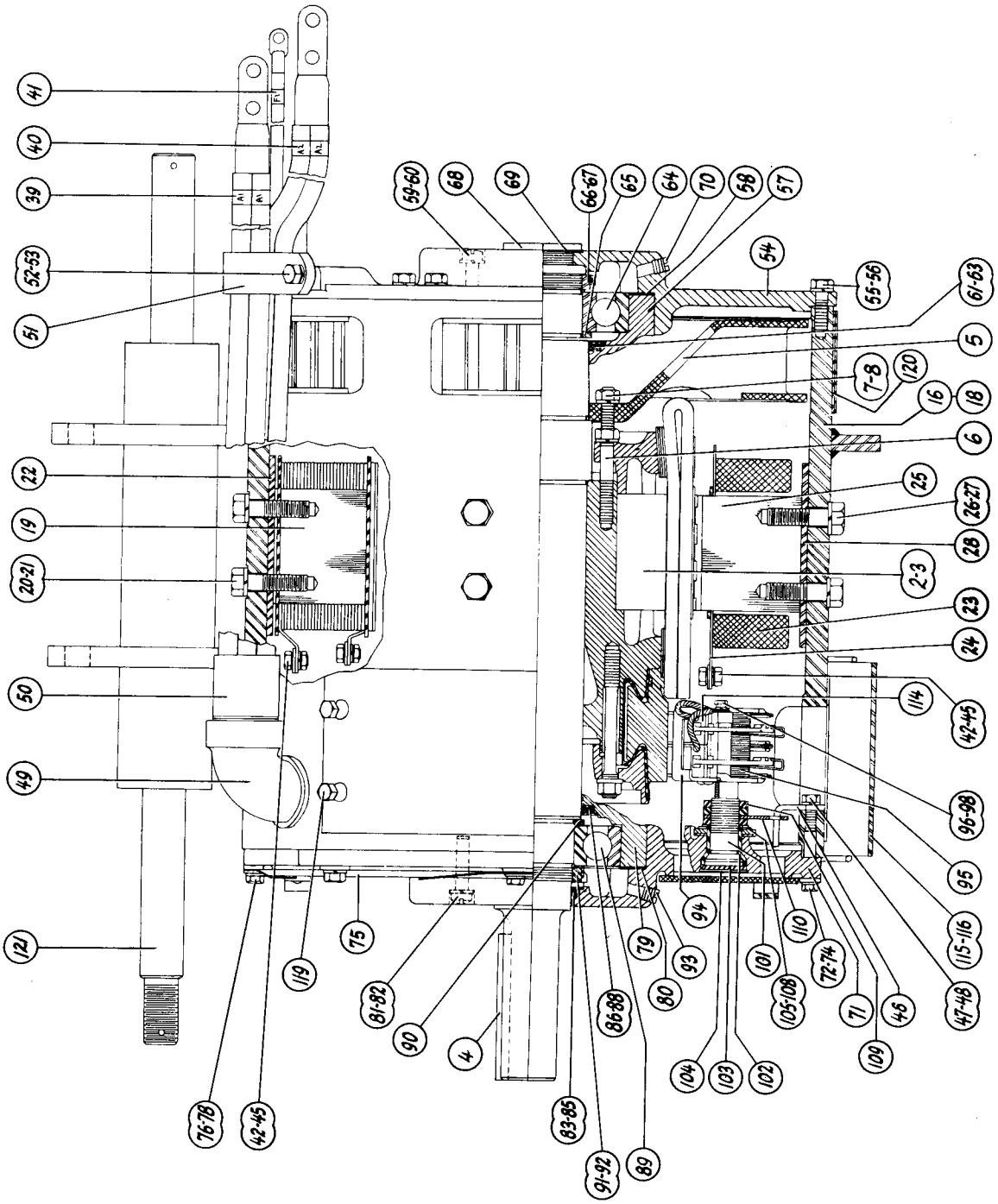

MODELS A-7161, A-7162, A-7163, A-7164, A-7165, A-7166, A-7168, A-8130

MOTOR REPLACEMENT PARTS

Illus. No.	Description	Quantity Per Unit	A-7166† A-7161§	A-8130† A-7162§	A-7163† A-7164§	A-7165† A-7168§
2	Armature, Fan & Shaft Assembly	1	5393955	5393726	5393956	5393726
*3	Armature & Shaft Assembly	1	5388285	5393728	5388915	5393728
4	Key, Shaft Extension	1	1064311	1064311	1064311	1064311
5	Fan	1	5393733	5393733	5393733	5393733
6	Stud, Fan Retainer	6	5327775	5327775	5327775	5327775
7	Nut, Fan Retainer	6	5312255	5312255	5312255	5312255
8	Lockwasher, Fan Retainer	6	120382	120382	120382	120382
16	Frame & Field Coil Assembly, D.C.	1	5393953	5393853	5388909	5393853
*17	Connection Diagram	1	5393725	5393355	5393355	5393355
18	Frame	1	5393710	5393710	5393710	5393710
19	Interpole Coil and Pole Piece Assembly	4	5393745	5393745	5388901	5393745
20	Bolt, Pole Piece Mounting	8	122446	122446	122446	122446
21	Lockwasher, Pole Piece Mounting	8	120384	120384	120384	120384
22	Shim, Pole Piece	4	1069975	1069975	1069975	1069975
23	Shunt Coil	4	5393823	5393823	5388906	5393823
24	Series Coil	4	5393851	5393851	5388908	5393851
25	Pole Piece, Shunt and Series	4	5393820	5393820	5393820	5393820
26	Bolt, Pole Piece Mounting	8	122446	122446	122446	122446
27	Lockwasher, Pole Piece Mounting	8	120384	120384	120384	120384
28	Shim, Pole Piece	4	5393857	5393857	5393857	5393857
*29	Lead Assembly, Shunt Coil to A2 Junction	1	5393895	5393895	1076385	5393895
*30	Lead Assembly, Shunt Coil to Shunt Coil	3	5393840	5393840	5393840	5393840
*31	Lead Assembly, Shunt Coil to F1 Junction	1	5393841	-	-	-
*32	Lead Assembly, Shunt Coil to Series Coil	1	5393896	-	-	-
*33	Lead Assembly, Interpole Coil to Brush	2	5387804	5385668	5385669	5385668
*34	Lead Assembly, Interpole Coil to Series Coil	2	5387803	-	-	-
*35	Lead Assembly, Interpole Coil to Series Coil	1	5387843	-	-	-
*36	Lead Assembly, Interpole Coil to Interpole Coil	1	-	5385356	5385670	5385356
*37	Lead Assembly, Series Coil to Brush	1	5387802	-	-	-
*38	Lead Assembly, Series Coil to Series Coil	2	-	5393797	1076329	5393797
39	Lead Assembly, A1	1	5388278	5393799	5393799	5393799
40	Lead Assembly, A2	1	5388272	5393798	1076379	5393798
41	Lead Assembly, F1	1	5393871	5393870	5393870	5393870
42	Bolt, Coil Connector (Short)	12	120834	120834	5388520	120834
43	Bolt, Lead Connector (Long)	2	120228	-	-	-
44	Nut, Connector	12	123437	123437	5381850	123437
45	Lockwasher, Connector	12	120214	120214	120214	120214
46	Bracket, Lead Retainer	4	5393855	5393855	5393855	5393855
47	Bolt, Bracket	4	122007	122007	122007	122007
48	Lockwasher, Bracket	4	120214	120214	120214	120214
49	Lead Conduit Elbow	1	5395517	5393720	5393720	5393720
50	Lead Conduit Nipple	1	5388276	5393719	5393719	5393719
51	Clamp, Lead to Frame	1	5314584	5314584	5314584	5314584
52	Bolt, Clamp	2	120233	120233	120233	120233
53	Lockwasher, Clamp	2	120382	120382	120382	120382
54	End Frame (Opp. Comm. End)	1	5393830	5393830	5393830	5393830
55	Bolt, End Frame Mounting	6	186679	186679	186679	186679
56	Lockwasher, End Frame Mounting	6	120382	120382	120382	120382
57	Bearing Housing Assembly	1	5393742	5393742	5393742	5393742
58	Gasket, Bearing Housing	1	5312229	5312229	5312229	5312229
59	Screw, Bearing Housing Mounting	4	1057178	1057178	1057178	1057178
60	Lockwasher, Bearing Housing Mounting	4	120382	120382	120382	120382
61	Felt Seal	1	1079145	1079145	1079145	1079145
62	Washer, Seal Retainer	1	5316993	5316993	5316993	5316993
63	Expansion Ring, Seal Retainer	1	1078259	1078259	1078259	1078259
64	Bearing	1	5364645	5364645	5364645	5364645
65	Washer, Bearing Spacer	1	5312203	5312203	5312203	5312203
66	Locknut, Bearing	1	5311754	5311754	5311754	5311754
67	Lockwasher, Bearing	1	1070039	1070039	1070039	1070039

Revised March 1953 * - Not Illustrated § - Winter Band
† - All Weather Band

(Continued on next page)

MOTOR REPLACEMENT PARTS (Continued)

Illus. No.	Description	Quantity Per Unit	A-7166† A-7161§	A-8130† A-7162§	A-7163† A-7164§	A-7165† A-7168§
68	Plug, End Frame Center	1	5381885	5381885	5381885	5381885
69	Gasket, Plug	1	043216	043216	043216	043216
70	Pipe Plug, Bearing Reservoir	2	103883	103883	103883	103883
71	End Frame & Brush Holder Assembly (Comm. End)	1	5393826	5393825	5388920	5393825
72	Bolt, End Frame Mounting	4	186679	186679	186679	186679
73	Lockwasher, End Frame Mounting	4	120382	120382	120382	120382
74	Washer, End Frame Mounting	4	5309587	5309587	5309587	5309587
75	Cover Plate Assembly	1	5393962	5393962	5393962	5393962
76	Spring, Cover Plate Retainer	4	5392974	5392974	5392974	5392974
77	Bolt, Retainer Spring	8	121887	121887	121887	121887
78	Lockwasher, Retainer Spring	8	120380	120380	120380	120380
79	Bearing Housing Assembly	1	5393743	5393743	5393743	5393743
80	Gasket, Bearing Housing	1	5312229	5312229	5312229	5312229
81	Screw, Bearing Housing Mounting	4	1057178	1057178	1057178	1057178
82	Lockwasher, Bearing Housing Mounting	4	120382	120382	120382	120382
83	Felt Seal (Outer)	1	5324298	5324298	5324298	5324298
84	Washer, Seal Retainer (Outer)	1	5327756	5327756	5327756	5327756
85	Expansion Ring, Seal Retainer (Outer)	1	1078262	1078262	1078262	1078262
86	Felt Seal (Inner)	1	1079145	1079145	1079145	1079145
87	Washer, Seal Retainer (Inner)	1	5316993	5316993	5316993	5316993
88	Expansion Ring, Seal Retainer (Inner)	1	1078259	1078259	1078259	1078259
89	Bearing	1	5364645	5331606	5364645	5364645
90	Washer, Bearing Spacer	1	5312203	5312203	5312203	5312203
91	Locknut, Bearing	1	5311754	5311754	5311754	5311754
92	Lockwasher, Bearing	1	1070039	1070039	1070039	1070039
93	Pipe Plug, Bearing Reservoir	2	103883	103883	103883	103883
94	Brush Holder and Spring Assembly	4	5393836	5393835	5388925	5393835
95	Spring, Brush Tension	8	5310593	5310593	5310593	5310593
96	Screw, Brush Lead Terminal	4	5396361	5396361	5396361	5396361
97	Lockwasher, Brush Lead Terminal	4	120217	120217	120217	120217
98	Washer, Brush Lead Terminal	4	042663	042663	042663	042663
*99	Screw, Brush Holder Clamp	8	5310598	5310598	5310598	5310598
*100	Locknut, Brush Holder Clamp	8	123479	123479	123479	123479
101	Brush Holder Stud and Insulating Sleeve Assem.	4	5385684	5385684	5385684	5385684
102	Insulating Sleeve	4	5312128	5312128	5312128	5312128
103	Insulating Disc, Stud End	4	5317124	5317124	5317124	5317124
104	Expansion Plug, Disc Retainer	4	1070969	1070969	1070969	1070969
105	Insulating Washer, Brush Holder Stud (1/16 in. Mica)	4	5313422	5313422	5313422	5313422
106	Insulating Washer, Brush Holder Stud (1/16 in. Mica)	4	5312127	5312127	5312127	5312127
107	Insulating Washer, Brush Holder Stud (5/32 in. Fibre)	4	5386534	5386534	5386534	5386534
108	Spring Washer, Brush Holder Stud	4	5327711	5327711	5327711	5327711
109	Locknut, Brush Holder Stud	12	5308407	5308407	5308407	5308407
110	Terminal Clip, Brush Holder Stud	4	5393832	5393832	5393832	5393832
*111	Bolt, Terminal Clip	4	132315	132315	132315	132315
*112	Nut, Terminal Clip	4	123437	123437	123437	123437
*113	Lockwasher, Terminal Clip	4	120214	120214	120214	129214
114	Brush	8	5388271	5393834	(4)5388931	5393834
115	Cover Band and Baffle Assembly	1	5393862	5393862	5393862	5393862
*116	Gasket, Cover Band	1	5385746	5385746	5385746	5385746
117	Cover Band and Clamp Assembly	1	5393863	5393863	5393863	5393863
118	Gasket, Cover Band	1	5385757	5385747	5385747	5385747
119	Bolt, Cover Bands Mounting	4	1060327	1060327	1060327	1060327
120	Cover Band Assembly, Fan (Winter Band)	1	5393866	5393866	5393866	5393866
120	Cover Band Assembly, Fan (All Weather Band)	1	5388935	5388935	5388935	5388935
121	Shaft, Mounting Pivot	1	5323788	5323788	5323788	5323788
*122	Bracket, Belt Tension Mech	1	5393739	5393739	5393739	5393739
*123	Bolt, Bracket Mounting	3	122433	122433	122433	122433
*124	Lockwasher, Bracket Mounting	3	120384	120384	120384	120384
*126	Name Plate, D.C	1	5365449	5365449	5365499	5365449
*127	Drive Screw, Name Plate	6	1061405	1061405	1061405	1061405

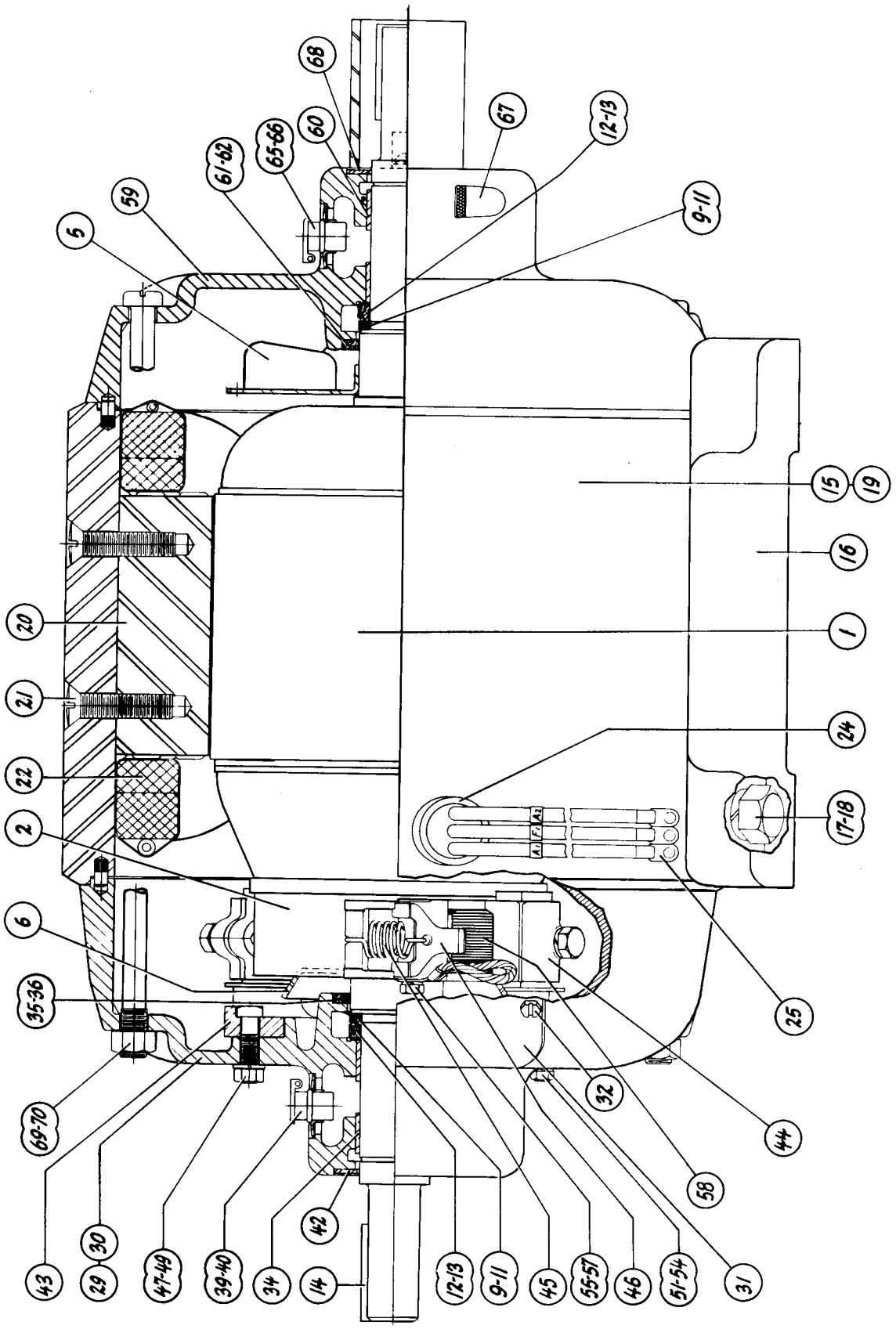

MODELS A-7170, A-7171, A-7172, A-7173, A-7174, A-7175 A-7178, A-7179, A-7181, A-7182, A-7183, A-7187, A-7741

MOTOR REPLACEMENT PARTS

Illus. No.	Description	Quantity Per Unit	A-7170	A-7171	A-7172	A-7173	A-7174	A-7175	A-7178
1	Armature & Fan Assem.	1	5337640	5397230	5397230	5397231	1069643	5369872	1069656
2	Commutator Assem.	1	038973	038973	038973	039232	5319231	038971	5319239
3 *	Insulating Tube	1	1055940	1055940	1055940	1055940	5396362	1055940	5396362
4 *	Insulating Tube	2	039201	039201	038201	039201	039294	039201	039294
5	Fan	1	043635	043635	043635	043635	042243	043635	042243
6	Balance Disc	1	038416	038416	038416	038416	1072389	038416	1072389
7 *	Balance Weight	1	036764	036764	036764	036764	038194	036764	038194
8 *	Balance Weight	1	041573	041573	041573	041573	038195	041573	038195
9	Thrust Washer (.010)	2	-	-	-	-	043145	-	043145
10	Thrust Washer (.020)	1	038102	038102	038102	038102	037613	038102	037613
11	Thrust Washer (.030)	6	5304467	5304467	5304467	5304467	-	5304467	-
12	Steel Collar, Oil Thrower	2	5314216	5314216	5314216	5314216	5305072	5314216	5305072
13	Cork Washer, Oil Thrower	2	5304468	5304468	5304468	5304468	5305071	5304468	5305071
14	Key, Shaft	1	-	-	-	-	048488	-	048488
15	Base, Frame & Coil Assem.	1	5337570	5337570	5398255	5373356	5396332	5373355	5337154
16	Base	1	5300731	5300731	5300731	5300731	1064517	5300731	1064517
17	Screw, Base Mounting	4	132330	132333	132333	132330	120650	132330	215735
18	Lockwasher, Base Mounting	4	103320	103320	103320	103320	103323	103320	103323
19	Frame	1	5337576	5337576	5337576	5337576	5396308	5337576	5396308
20	Pole Piece	2	043632	043632	043632	043632	1058641	043632	1058641
21	Screw, Pole Piece Mounting	4	036776	036776	036776	036776	1070426	036776	1070426
22	Field Coil Assem.	1	043754	043754	043754	5341852	5393800	5341849	5393806
23 *	Grommet, Lead Insulator	2	041808	041808	041808	041808	-	041808	-
24	Nipple, Lead Conduit	1	-	-	-	-	5365448	-	5365448
25	Terminal Clip or Lug	3	1053856	1053856	1053856	1053856	042786	1053856	042786
26 *	Condenser Assem.	2	1880376	1880376	1880376	1880376	1880376	1880376	1880376
27 *	Screw, Condenser Mounting	2	115402	115402	115402	115402	115402	115402	115402
28 *	Lockwasher, Condenser Mounting	2	106497	106497	106497	106497	106497	106497	106497
29	End Frame & Brush Bracket Assem.	1	5330522	5360522	5330522	5330523	5388736	5330523	5340336
30	End Frame & Brg. Assem.	1	1067132	1067132	1067132	1067132	5388796	1067132	5388796
31	Cover Plate, End Frame	2	1064969	1064969	1064969	1064969	1079700	1064969	1079700
32	Screw, Cover Plate	4	042453	042453	042453	042453	5321076	042453	5321076
33 *	Gasket, Cover Plate	2	-	-	-	-	5331305	-	5331305
34	Bearing	1	1057142	1057142	1057142	1057142	1057141	1057142	1057141
35	Felt Seal	2	-	-	-	-	1067944	-	1067944
36	Washer, Seal Retainer	2	-	-	-	-	1068592	-	1068592
37 *	Cup, Oil Thrower	1	049947	049947	049947	049947	-	049947	-
38 *	Wicking	1	037654	037654	037654	037654	037654	037654	037654
39	Oiler, Upper	1	047221	047221	047221	047221	5319468	047221	5319468
40	Expansion Plug, Oiler	1	1075551	1075551	1075551	1075551	5319469	1075551	5319469
41 *	Oiler, Lower	1	5320447	5320447	5320447	5320447	5320447	5320447	5320447
42	Expansion Plug, Shaft Extension	1	1070516	1070516	1070516	1070516	1064955	1070516	1064955
43	Brush Bracket & Holder Assem.	1	5308136	1073172	5308136	5308136	5396356	5308136	5396355
44	Brush Holder	2	038180	038180	038180	038180	5312458	038180	5364114
45	Brush Spring	2	038636	038636	038636	038636	049835	038636	1066014
46	Brush Arm	2	-	-	-	-	5354004	-	5354004
47	Screw, Brush Bracket Locking	1	037972	037972	037972	037972	5364172	037972	5364172
48	Nut, Brush Bracket Locking	1	049681	049681	049681	049681	120375	049681	120375
49	Lockwasher, Brush Bracket Locking	1	106497	106497	106497	106497	103319	106497	103319
50 *	Insulating Tube, Brush Holder	2	-	-	-	-	5364170	-	5364170
51	Screw, Brush Bracket Mounting	1	1074743	1074743	1074743	1074743	037972	1074743	037972
52	Nut, Brush Bracket Mounting	1	-	-	-	-	5337834	-	5337834
53	Washer, Brush Bracket Mounting	1	042663	042663	042663	042663	-	042663	-
54	Lockwasher, Brush Bracket Mounting	1	106497	106497	106497	106497	106497	106497	106497
55	Screw, Brush Lead Terminal	2	038581	038581	038581	038581	1065723	038581	1065723
56	Washer, Brush Lead Terminal	2	1061413	1061413	1061413	1061413	-	1061413	-
57	Lockwasher, Brush Lead Terminal	2	106496	106496	106496	106496	106497	106496	106497
58	Brush & Hook Assem.	2	038660	038660	038660	038622	5308736	038622	5340170

* - Not illustrated

 (Continued on next page)

MOTOR REPLACEMENT PARTS

Illus. No.	Description	Quantity Per Unit	A-7179	A-7181	A-7182	A-7183	A-7187	A-7741
1	Armature & Fan Assem.	1	5340505	1069641	1069643	1069642	1069641	5397231
2	Commutator Assem.	1	5319239	5319234	5319231	5319230	5319234	039232
3 *	Insulating Tube	1	5396362	5396362	5396362	5396362	5396362	1055940
4 *	Insulating Tube	2	039294	039294	039294	039294	039294	039201
5	Fan	1	042243	042243	042243	042243	042243	043635
6	Balance Disc	1	1072389	1072389	1072389	1072389	1072389	038416
7 *	Balance Weight	1	038194	038194	038194	038194	038194	036764
8 *	Balance Weight	1	038195	038195	038195	038195	038195	041573
9	Thrust Washer (.010)	2	043145	043145	043145	043145	043145	-
10	Thrust Washer (.020)	1	037613	037613	037613	037613	037613	038102
11	Thrust Washer (.030)	6	-	-	-	-	-	5304467
12	Steel Collar, Oil Thrower	2	5305072	5305072	5305072	5305072	5305072	5314216
13	Cork Washer, Oil Thrower	2	5305071	5305071	5305071	5305071	5305071	5304468
14	Key, Shaft	1	048488	048488	048488	048488	048488	-
15	Base, Frame & Coil Assem.	1	5337151	1075216	1075217	1075218	5396330	5398256
16	Base	1	1064517	1064517	1064517	1064517	1064517	5300731
17	Screw, Base Mounting	4	120650	120650	120650	120650	120650	132330
18	Lockwasher, Base Mounting	4	103323	103323	103323	103323	103323	103320
19	Frame	1	5388797	5388797	5388797	5388797	5396308	5337576
20	Pole Piece	2	1058641	1058641	1058641	1058641	1058641	043632
21	Screw, Pole Piece Mounting	4	1070426	1070426	1070426	1070426	1070426	036776
22	Field Coil Assem.	1	1069324	1069321	5393800	5393803	1069321	5341852
23 *	Grommet, Lead Insulator	2	-	-	-	-	-	041808
24	Nipple, Lead Conduit	1	5365448	5365448	5365448	5365448	5365448	-
25	Terminal Clip or Lug	3	042786	042786	042786	042786	042786	1053856
26 *	Condenser Assem.	2	1880376	1880376	1880376	1880376	1880376	1880376
27 *	Screw, Condenser Mounting	2	115402	115402	115402	115402	115402	115402
28 *	Lockwasher, Condenser Mounting	2	106497	106497	106497	106497	106497	106497
29	End Frame & Brush Bracket Assem.	1	5340336	5388735	5388736	5388736	5388735	5330523
30	End Frame & Brg. Assem.	1	5388796	5388796	5388796	5388796	5388796	1067132
31	Cover Plate, End Frame	2	1079700	1079700	1079700	1079700	1079700	1064969
32	Screw, Cover Plate	4	5321076	5321076	5321076	5321076	5321076	042453
33 *	Gasket, Cover Plate	2	5331305	5331305	5331305	5331305	5331305	-
34	Bearing	1	1057141	1057141	1057141	1057141	1057141	1057142
35	Felt Seal	2	1067944	1067944	1067944	1067944	1067944	-
36	Washer, Seal Retainer	2	1068592	1068592	1068592	1068592	1068592	-
37 *	Cup, Oil Thrower	1	-	-	-	-	-	049947
38 *	Wicking	1	037654	037654	037654	037654	037654	037654
39	Oiler, Upper	1	5319468	5319468	5319468	5319468	5319468	047221
40	Expansion Plug, Oiler	1	5319469	5319469	5319469	5319469	5319469	1075551
41 *	Oiler, Lower	1	5320447	5320447	5320447	5320447	5320447	5320447
42	Expansion Plug, Shaft Extension	1	1064955	1064955	1064955	1064955	1064955	1070516
43	Brush Bracket & Holder Assem.	1	5396355	5396355	5396356	5396356	5396355	5308136
44	Brush Holder	2	5364114	5364114	5312458	5321458	5364114	038180
45	Brush Spring	2	1066014	1066014	049835	049835	1066014	038636
46	Brush Arm	2	5354004	5354004	5354004	5354004	5354004	-
47	Screw, Brush Bracket Locking	1	5364172	5364172	5364172	5364172	5364172	037972
48	Nut, Brush Bracket Locking	1	120375	120375	120375	120375	120375	049681
49	Lockwasher, Brush Bracket Locking	1	103319	103319	103319	103319	103319	106497
50 *	Insulating Tube, Brush Holder	2	5364170	5364170	5364170	5364170	5364170	-
51	Screw, Brush Bracket Mounting	1	037972	037972	037972	037972	037972	1074743
52	Nut, Brush Bracket Mounting	1	5337834	5337834	5337834	5337834	5337834	-
53	Washer, Brush Bracket Mounting	1	-	-	-	-	-	042663
54	Lockwasher, Brush Bracket Mounting	1	106497	107497	106497	106497	106497	106497
55	Screw, Brush Lead Terminal	2	1065723	1065723	1065723	1065723	1065723	038581
56	Washer, Brush Lead Terminal	2	-	-	-	-	-	1061413
57	Lockwasher, Brush Lead Terminal	2	106497	106497	106497	106497	106497	106496
58	Brush & Hook Assem.	2	5364168	5364168	5308736	5308736	5364168	038622

* - Not illustrated

(Continued on next page)

MOTOR REPLACEMENT PARTS (Continued)

Illus. No.	Description	Quantity Per Unit	A-7170	A-7171	A-7172	A-7173	A-7174	A-7175	A-7178
59	End Frame & Brg. Assem. (Opp.Comm.End.)	1	5363226	5363226	5363226	5363226	5388794	5363226	5388794
60	Bearing	1	1057142	1057142	1057142	1057142	1057141	1057142	1057141
61	Felt Seal	1	-	-	-	-	1067944	-	1067944
62	Washer, Seal Retainer	1	-	-	-	-	1068592	-	1068592
63 *	Cup, Oil Thrower	1	049947	049947	049947	049947	-	049947	-
64 *	Wicking	1	037654	037654	037654	037654	037654	037654	037654
65	Oiler, Upper	1	047221	047221	047221	047221	5319468	047221	5319468
66	Expansion Plug, Oiler	1	1075551	1075551	1075551	1075551	5319469	1075551	5319469
67	Oiler, Lower	1	5320447	5320447	5320447	5320447	5320447	5320447	5320447
68	Expansion Plug, Shaft Extension.	1	1070516	1070516	1070516	1070516	1064955	1070516	1064955
69	Thru-Bolt, End Frame Mounting.	2	1069253	1069253	1069253	1069253	1069191	1069253	1069191
70	Nut, Thru Bolt	2	042455	042455	042455	042455	042454	042455	042454
71 *	Name Plate	1	5326701	5326701	5326701	5326701	5365449	5326701	5365449
72 *	Drive Screw, Name Plate	2	5327153	5327153	5327153	5327153	5327153	5327153	5327153

MOTOR REPLACEMENT PARTS (Continued)

Illus. No.	Description	Quantity Per Unit	A-7179	A-7181	A-7182	A-7183	A-7187	A-7741
59	End Frame & Brg. Assem. (Opp.Comm.End.)	1	5388794	5388794	5388794	5388794	5388794	5363226
60	Bearing	1	1057141	1057141	1057141	1057141	1057141	1057142
61	Felt Seal	1	1067944	1067944	1067944	1067944	1067944	-
62	Washer, Seal Retainer	1	1068592	1068592	1068592	1068592	1068592	-
63 *	Cup, Oil Thrower.	1	-	-	-	-	-	049947
64 *	Wicking	1	037654	037654	037654	037654	037654	037654
65	Oiler, Upper	1	5319468	5319468	5319468	5319468	5319468	047221
66	Expansion Plug, Oiler	1	5319469	5319469	5319469	5319469	5319469	1075551
67	Oiler, Lower	1	5320447	5320447	5320447	5320447	5320447	5320447
68	Expansion Plug, Shaft Extension	1	1064955	1064955	1064955	1064955	1064955	1070516
69	Thru-Bolt, End Frame Mounting	2	1069191	1069191	1069191	1069191	1069191	1069253
70	Nut, Thru Bolt	2	042454	042454	042454	042454	042454	042455
71 *	Name Plate	1	5365449	5365449	5365449	5365449	5365449	5326701
72 *	Drive Screw, Name Plate	2	5327153	5327153	5327153	5327153	5327153	5327153

* - Not illustrated

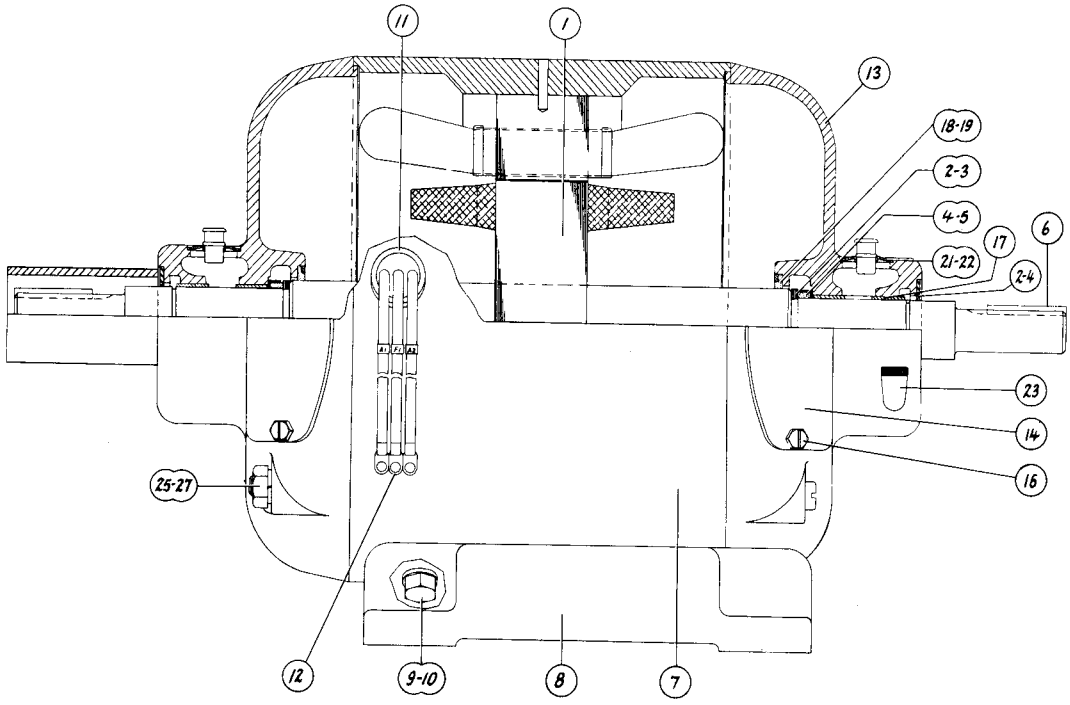

MODELS A-7180, A-7585

MOTOR REPLACEMENT PARTS

Illus. No.	Description	Quantity Per Unit	A-7180	A-7585
1	Rotor	1	5393356	5397100
2	Thrust Washer (.010)	2	043145	043145
3	Thrust Washer (.020)	10	037613	037613
4	Steel Collar, Oil Thrower	2	5305072	5305072
5	Cork Washer, Oil Thrower	2	5305071	5305071
6	Key, Shaft	2	048488	048488
7	Frame, Stator & Coil Assembly	1	5393974	5317729
8	Base	1	5393149	5393149
9	Screw, Base Mounting	4	120233	120233
10	Lockwasher, Base Mounting	4	103321	103321
11	Nipple, Lead Conduit	1	5393357	5393357
12	Terminal Lug	3	1053856	1053856
13	End Frame & Bearing Assem. (Both Ends)	2	5392490	5392490
14	Cover Plate, End Frame	4	1079700	1079700
15*	Gasket, Cover Plate	4	1079699	1079699
16	Screw, Cover Plate	8	5321096	5321096
17	Bearing	2	1057141	1057141
18	Felt Seal	2	1067944	1067944
19	Washer, Seal Retainer	2	1068592	1068592
20*	Wicking, Oil Reservoir	2	037654	037654
21	Oiler, Upper	2	5319468	5319468
22	Expansion Plug, Oiler	2	5319469	5319469
23	Oiler, Lower	2	5320447	5320447
24	Expansion Plug, Shaft Extension	2	1064955	1064955
25	Thru Bolt, End Frame Mounting	4	1069252	1069252
26	Nut, Thru Bolt	4	042455	042455
27	Lockwasher, Thru Bolt	4	103320	103320
28*	Name Plate	1	5393358	5393358
29*	Drive Screw, Name Plate	4	5327153	5327153

* - Not illustrated

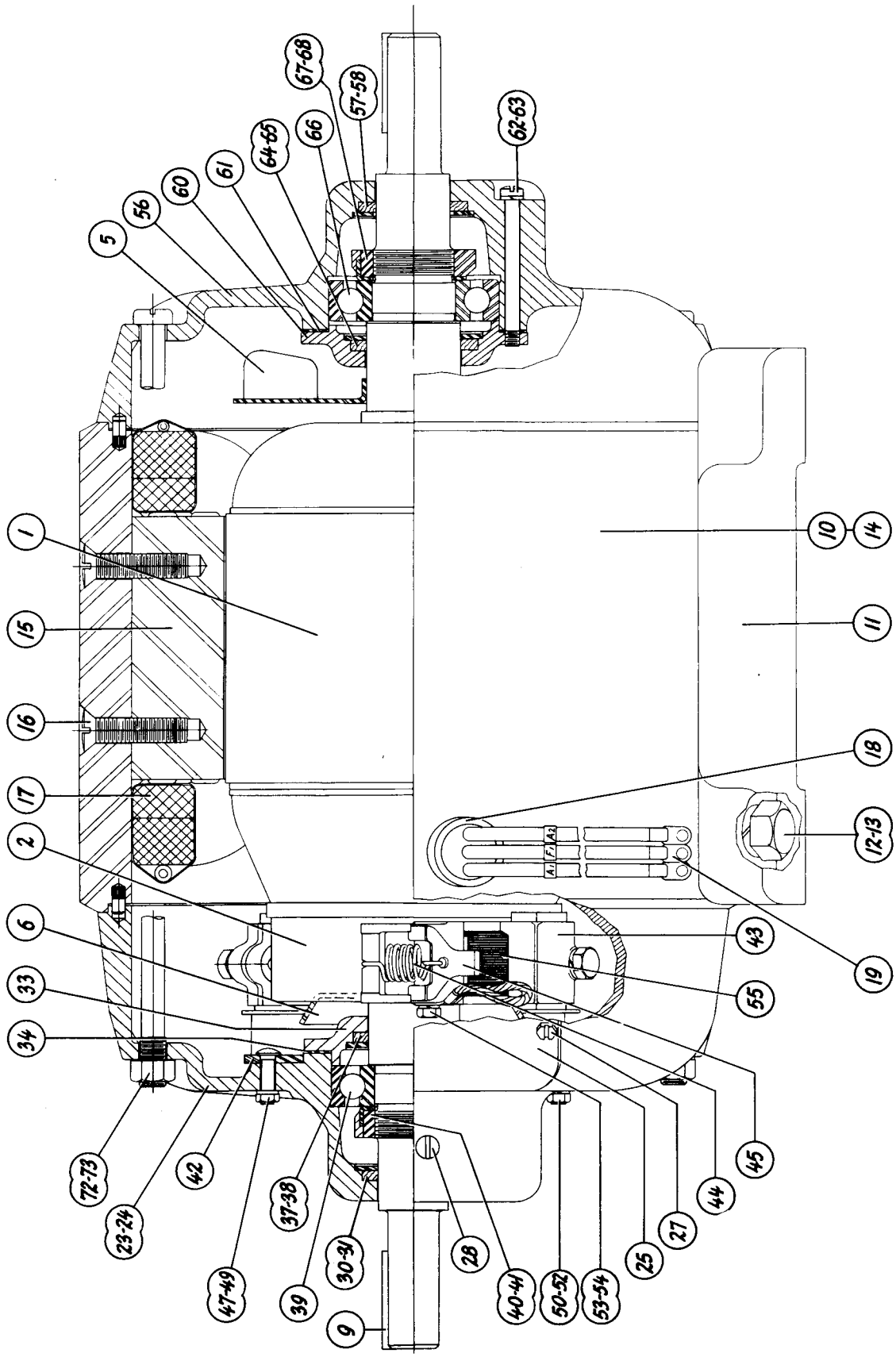

MODELS A-7176, A-7177, A-7184, A-7185, A-7191, A-7192
A-7193, A-7194, A-7195, A-7196, A-7197, A-7198, A-7199

MOTOR REPLACEMENT PARTS

Illus. No.	Description	Quantity Per Unit	A-7176	A-7177	A-7184	A-7185	A-7191	A-7192	A-7193
1	Armature & Fan Assem.	1	5340271	5340270	5340320	5338010	5365475	5365475	5365475
2	Commutator Assem.	1	5319233	5319233	5319239	5319239	5319231	5319231	5319231
3*	Insulating Tube	2	5311660	5311660	5311660	5311660	039294	039294	039294
4*	Insulating Tube	1	5396362	5396362	5396362	5396362	5396362	5396362	5396362
5	Fan	1	042243	042243	042243	042243	042243	042243	042243
6	Balance Disc	1	1077145	1077145	1077145	1077145	1072389	1072389	1072389
7*	Balance Weight	1	038194	038194	038194	038194	038194	038194	038194
8*	Balance Weight	1	038195	038195	038195	038195	038195	038195	038195
9	Key, Shaft	1	048488	048488	048488	048488	048488	048488	048488
10	Base, Frame & Coil Assem.	1	5340275	5340275	5336315	5336316	1075215	5392950	1075215
11	Base	1	5334092	5334092	1064517	1064517	1064517	1064517	1064517
12	Screw, Base Mounting	4	215735	215735	120650	120650	120650	120650	120650
13	Lockwasher, Base Mounting	4	103323	103323	103323	103323	103323	103323	103323
14	Frame	1	5340779	5340779	5336313	5336313	1068577	1060346	1068577
15	Pole Piece	2	042015	042015	5336314	5336314	1058641	1058641	1058641
16	Screw, Pole Piece Mounting	4	1070426	1070426	1070426	1070426	1070426	1070426	1070426
17	Field Coil Assem.	1	5397170	5397170	5340188	5340185	5393800	5393800	5393800
18	Nipple, Lead Conduit	1	5365448	5365448	5365448	5365448	5365448	5365448	5365448
19	Terminal Lug	3	1053856	1053856	1053856	1053856	1053856	1053856	1053856
20*	Condenser	2	-	-	-	-	1880376	1880376	1880376
21*	Screw, Condenser Mounting	2	-	-	-	-	115402	115402	115402
22	Lockwasher, Condenser Mounting	2	-	-	-	-	106497	106497	106497
23	End Frame & Brush Bracket Assem.	1	5340338	5340339	5340335	5340335	5388739	5357871	5357872
24	End Frame	1	5323376	5340171	5340171	5340171	1069056	1067129	1069056
25	Cover Plate, End Frame	2	1079700	1079700	1079700	1079700	1079700	1079700	1079700
26*	Gasket, Cover Plate	2	5331305	5331305	5331305	5331305	5331305	5331305	5331305
27	Screw, Cover Plate	4	5321076	5321076	5321076	5321076	5321076	5321076	5321076
28	Pipe Plug, Bearing Reservoir	2	-	-	-	-	1062157	1062157	1062157
29*	Oiler, Bearing Reservoir	1	047221	047221	047221	047221	-	-	-
30	Felt Seal	1	-	-	-	-	1079138	1079138	1079138
31	Washer, Seal Retainer	1	-	-	-	-	1070518	1070518	1070518
32*	Cork Seal	1	1063239	1063239	1063239	1063239	-	-	-
33	Bearing Cover	1	1064478	1064478	1064478	1064478	5351658	5351658	5351658
34	Gasket, Bearing Cover	1	1064477	1064477	1064477	1064477	5351655	5351655	5351655
35*	Screw, Brg. Cover Mounting	3	132133	132133	132133	132133	132161	132161	132161
36*	Lockwasher, Brg. Cover Mounting	3	106497	106497	106497	106497	106497	106497	106497
37	Felt Seal	1	-	-	-	-	1070537	1070537	1070537
38	Washer, Seal Retainer	1	-	-	-	-	1070514	1070514	1070514
39	Bearing	1	5379898	5379898	5379898	5379898	5379898	5379898	5379898
40	Locknut, Bearing	1	-	-	-	-	1071139	1071139	1071139
41	Lockwasher, Bearing	1	-	-	-	-	1067505	1067505	1067505
42	Brush Bracket & Holder Assem.	1	5396356	5396356	5396355	5396355	5396356	5357871	042445
43	Brush Holder	2	5312458	5312458	5364114	5364114	5312458	-	-
44	Brush Spring	2	049835	049835	1066014	1066014	049835	038575	038575
45	Brush Arm	2	5354004	5354004	5354004	5354004	5354004	-	-
46*	Insulating Tube, Brush Holder	2	5364170	5364170	5364170	5364170	5364170	-	-
47	Bolt, Bracket Locking (Top)	1	5364172	5364172	5364172	5364172	5364172	037972	037972
48	Nut, Bracket Locking (Top)	1	120375	120375	120375	120375	120375	5337834	5337834
49	Lockwasher, Bracket Locking (Top)	1	103319	103319	103319	103319	103319	106497	106497
50	Bolt, Bracket Locking (Bottom)	1	037972	037972	037972	037972	037972	037972	037972
51	Nut, Bracket Locking (Bottom)	1	5337834	5337834	5337834	5337834	5337834	5337834	5337834
52	Lockwasher, Bracket Locking (Bottom)	1	106497	106497	106497	106497	106497	106497	106497
53	Screw, Brush Lead Terminal	2	1065723	1065723	1065723	1065723	1065723	038581	038581
54	Lockwasher, Brush Lead Terminal	2	106496	106496	106496	106496	106496	106496	106496
55	Brush	2	5308736	5308736	5340170	5340170	5308736	038572	038572
56	End Frame (Opp. Comm. End)	1	5340172	5340172	5340172	5340172	1067128	1067128	1067128
57	Felt Seal	1	-	-	-	-	1079138	1079138	1079138

* - Not illustrated

(Continued on next page)

MOTOR REPLACEMENT PARTS

Illus. No.	Description	Quantity Per Unit	A-7194	A-7195	A-7196	A-7197	A-7198	A-7199
1	Armature & Fan Assem.	1	5365476	5365477	5399370	5365478	5338010	5365477
2	Commutator Assem.	1	5319234	5319230	5319239	5319239	5319239	5319230
3*	Insulating Tube	2	039294	039294	039294	039294	5311660	039294
4*	Insulating Tube	1	5396362	5396362	5396362	5396362	5396362	5396362
5	Fan	1	042243	042243	042243	042243	042243	042243
6	Balance Disc	1	1072389	1072389	1072389	1072389	1077145	1072389
7*	Balance Weight	1	038194	038194	038194	038194	038194	038194
8*	Balance Weight	1	038195	038195	038195	038195	038195	038195
9	Key, Shaft	1	048488	048488	048488	048488	048488	048488
10	Base, Frame & Coil Assem.	1	1075219	5337150	5337151	5337152	5511845	5396331
11	Base	1	1064517	1064517	1064517	1064517	1064517	1064517
12	Screw, Base Mounting	4	120650	120650	215735	120650	215735	120650
13	Lockwasher, Base Mounting	4	103323	103323	103323	103323	103323	103323
14	Frame	1	1068577	1068577	5396308	1068577	5324029	5396308
15	Pole Piece	2	1058641	1058641	1058641	1058641	5336314	1058641
16	Screw, Pole Piece Mounting	4	1070426	1070426	1070426	1070426	1070426	1070426
17	Field Coil Assem.	1	1069321	5393803	1069324	5393806	5340185	5393803
18	Nipple, Lead Conduit	11	5365448	5365448	5365448	5365448	5365448	5365448
19	Terminal Lug	3	1053856	1053856	1053856	1053856	1053856	1053856
20*	Condenser	2	1880376	1880376	1880376	1880376	-	1880376
21*	Screw, Condenser Mounting	2	115402	115402	115402	115402	-	115402
22*	Lockwasher, Condenser Mounting	2	106497	106497	106497	106497	-	-
23	End Frame & Brush Bracket Assem.	1	5388738	5388739	5340337	5340337	5340335	5388739
24	End Frame	1	1069056	1069056	1069056	1069056	5340171	1069056
25	Cover Plate, End Frame	2	1079700	1079700	1079700	1079700	1079700	1079700
26*	Gasket, Cover Plate	2	5331305	5331305	5331305	5331305	5331305	5331305
27	Screw, Cover Plate	4	5321076	5321076	5321076	5321076	5321076	5321076
28	Pipe Plug, Bearing Reservoir	2	1062157	1062157	1062157	1062157	-	1062157
29*	Oiler, Bearing Reservoir	1	-	-	-	-	047221	-
30	Felt Seal	1	1079138	1079138	1079138	1079138	-	1079138
31	Washer, Seal Retainer	1	1070518	1070518	1070518	1070518	-	1070518
32*	Cork Seal	1	-	-	-	-	1063239	-
33	Bearing Cover	1	5351658	5351658	5351658	5351658	1064478	5351658
34	Gasket, Bearing Cover	1	5351655	5351655	5351655	5351655	1064477	5351655
35*	Screw, Brg. Cover Mounting	3	132161	132161	132161	132161	132133	132161
36*	Lockwasher, Brg. Cover Mounting	3	106497	106497	106497	106497	106497	106497
37	Felt Seal	1	1070537	1070537	1070537	1070537	-	1070537
38	Washer, Seal Retainer	1	1070514	1070514	1070514	1070514	-	1070514
39	Bearing	1	5379898	5379898	5379898	5379898	5379898	5379898
40	Locknut, Bearing	1	1071139	1071139	1071139	1071139	-	1071139
41	Lockwasher, Bearing	1	1067505	1067505	1067505	1067505	-	1067505
42	Brush Bracket & Holder Assem.	1	5396355	5396356	5396355	5396355	5396355	5396356
43	Brush Holder	2	5364114	5312458	5364114	5364114	5364114	5312458
44	Brush Spring	2	1066014	049835	1066014	1066014	1066014	049835
45	Brush Arm	2	5354004	5354004	5354004	5354004	5354004	5354004
46*	Insulating Tube, Brush Holder	2	5364170	5364170	5364170	5364170	5364170	5364170
47	Belt, Bracket Locking (Top)	1	5364172	5364172	5364172	5364172	5364172	5364172
48	Nut, Bracket Locking (Top)	1	120375	120375	120375	120375	120375	120375
49	Lockwasher, Bracket Locking (Top)	1	103319	103319	103319	103319	103319	103319
50	Bolt, Bracket Locking (Bottom)	1	037972	037972	037972	037972	037972	037972
51	Nut, Bracket Locking (Bottom)	1	5337834	5337834	5337834	5337834	5337834	5337834
52	Lockwasher, Bracket Locking (Bottom)	1	106497	106497	106497	106497	106497	106497
53	Screw, Brush Lead Terminal	2	1065723	1065723	1065723	1065723	1065723	1065723
54	Lockwasher, Brush Lead Terminal	2	106496	106496	106496	106496	106496	106496
55	Brush	2	5340170	5308736	5340170	5340170	5340170	5308736
56	End Frame (Opp. Comm. End)	1	1067128	1067128	1067128	1067128	5340172	1067128
57	Felt Seal	1	1079138	1079138	1079138	1079138	-	1079138

* - Not illustrated

 (Continued on next page)

MOTOR REPLACEMENT PARTS (Continued)

Illus. No.	Description	Quantity Per Unit	A-7176	A-7177	A-7184	A-7185	A-7191	A-7192	A-7193
58	Washer, Seal Retainer	1	-	-	-	-	1070518	1070518	1070518
59*	Cork Seal	1	1063239	1063239	1063239	1063239	-	-	-
60	Bearing Cover	1	1064478	1064478	1064478	1064478	5351659	5351659	5351659
61	Gasket, Brg. Cover	1	1064477	1064477	1064477	1064477	5351655	5351655	5351655
62	Screw, Brg. Cover Mounting	3	132133	132133	132133	132133	132161	132161	132161
63	Lockwasher, Brg. Cover Mounting	3	106497	106497	106497	106497	106497	106497	106497
64	Felt Seal	1	-	-	-	-	1070537	1070537	1070537
65	Washer, Seal Retainer	1	-	-	-	-	1070514	1070514	1070514
66	Bearing	1	5379898	5379898	5379898	5379898	5379898	5379898	5379898
67	Locknut, Bearing	1	-	-	-	-	1071139	1071139	1071139
68	Lockwasher, Bearing	1	-	-	-	-	1067505	1067505	1067505
69*	Washer, End Play	2	1070938	1070938	1070938	1070938	-	-	-
70*	Pipe Plug, Bearing Reservoir	2	-	-	-	-	1062157	1062157	1062157
71*	Oiler, Bearing Reservoir	1	047221	047221	047221	047221	-	-	-
72	Thru Bolt, End Frame Mounting	2	1069195	1069195	1069199	1069199	1069191	1069191	1069191
73	Nut, Thru Bolt	2	042454	042454	042454	042454	042454	042454	042454
74*	Name Plate	1	5365449	5365449	5365449	5365449	5365449	5365449	5365449
75*	Drive Screw, Name Plate	2	5327153	5327153	5327153	5327153	5327153	5327153	5327153
76*	Resistor, Compensating	1	5340177	5340177	5340176	5340176	-	-	-
77*	Housing, Resistor	1	5340174	5340174	5340174	5340174	-	-	-
78	Gasket, Housing	1	5340173	5340173	5340173	5340173	-	-	-
79*	Bolt, Housing Mounting	2	121887	121887	121887	121887	-	-	-
80*	Lockwasher, Housing Mounting	2	103319	103319	103319	103319	-	-	-

MOTOR REPLACEMENT PARTS (Continued)

Illus. No.	Description	Quantity Per Unit	A-7194	A-7195	A-7196	A-7197	A-7198	A-7199
58	Washer, Seal Retainer	1	1070518	1070518	1070518	1070518	-	1070518
59*	Cork Seal	1	-	-	-	-	1063239	-
60	Bearing Cover	1	5351659	5351659	5351659	5351659	1064478	5351659
61	Gasket, Brg. Cover	1	5351655	5351655	5351655	5351655	1064477	5351655
62	Screw, Brg. Cover Mounting	3	132161	132161	132161	132161	132133	132161
63	Lockwasher, Brg. Cover Mounting	3	106497	106497	106497	106497	106497	106497
64	Felt Seal	1	1070537	1070537	1070537	1070537	-	1070537
65	Washer, Seal Retainer	1	1070514	1070514	1070514	1070514	-	1070514
66	Bearing	1	5379898	5379898	5379898	5379898	5379898	5379898
67	Locknut, Bearing	1	1071139	1071139	1071139	1071139	-	1071139
68	Lockwasher, Bearing	1	1067505	1067505	1067505	1067505	-	1067505
69*	Washer, End Play	2	-	-	-	-	1070938	-
70*	Pipe Plug, Bearing Reservoir	2	1062157	1062157	1062157	1062157	-	1062157
71*	Oiler, Bearing Reservoir	1	-	-	-	-	047221	-
72	Thru Bolt, End Frame Mounting	2	1069191	1069191	1069191	1069191	1069199	1069191
73	Nut, Thru Bolt	2	042454	042454	042454	042454	042454	042454
74*	Name Plate	1	5365449	5365449	5365449	5365449	5465449	5365449
75*	Drive Screw, Name Plate	2	5327153	5327153	5327153	5327153	5327153	5327153
76*	Resistor, Compensating	1	-	-	-	-	5340177	-
77*	Housing, Resistor	1	-	-	-	-	5340174	-
78*	Gasket, Housing	1	-	-	-	-	5340173	-
79*	Bolt, Housing Mounting	2	-	-	-	-	121887	-
80*	Lockwasher, Housing Mounting	2	-	-	-	-	103319	-

* - Not illustrated

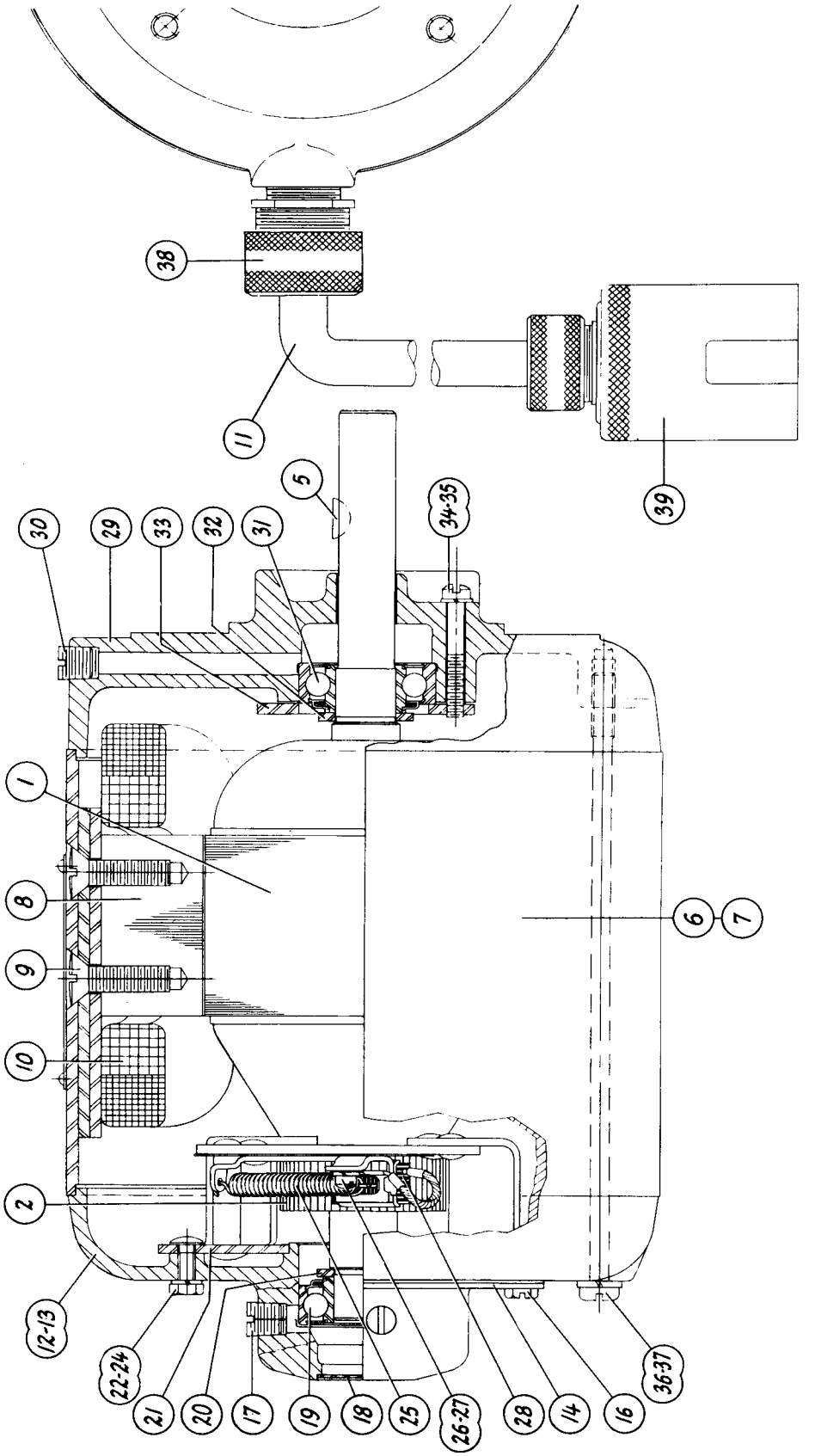

MODELS A-7188, A-7189

MOTOR REPLACEMENT PARTS

Illus. No.	Description	Quantity Per Unit	A-7188	A-7189
1	Armature Assembly	1	5340890	5340891
2	Commutator Assembly	1	045967	045964
3	Insulating Tube	2	045759	045759
4	Insulating Tube	1	041773	041773
5	Key, Shaft	1	106749	106749
6	Frame & Coil Assembly	1	5340250	5340251
7	Frame	1	5340017	5340017
8	Pole Piece	2	5333975	5333975
9	Screw, Pole Piece Mounting	4	036776	036776
10	Field Coil Assembly	1	5373009	5373012
11	Cable, Lead Assembly	1	5340765	5340765
12	End Frame & Brush Bracket Assembly	1	5356809	5356810
13	End Frame	1	5340767	5340767
14	Cover Plate, End Frame	2	5318026	5318026
15	Gasket, Cover Plate	2	5318029	5318029
16	Screw, Cover Plate	4	5321076	5321076
17	Pipe Plug, Brg. Reservoir	2	1062157	1062157
18	Expansion Plug, Brg. Reservoir	1	049306	049306
19	Bearing	1	5340769	5340769
20	Washer, Bearing Spacer	1	1056134	1056134
21	Brush Bracket Assembly	1	5333926	5333926
22	Bolt, Bracket Locking	2	5336056	5336056
23	Nut, Bracket Locking	2	5337834	5337834
24	Lockwasher, Bracket Locking	2	106497	106497
25	Brush Spring	1	036304	036304
26	Screw, Brush Lead Terminal	2	131954	131954
27	Lockwasher, Brush Lead Terminal	2	106496	106496
28	Brush and Hook Assembly	2	045161	043936
29	End Frame (Opp. Comm. End)	1	5340766	5340766
30	Pipe Plug, Brg. Reservoir	1	1062157	1062157
31	Bearing	1	5382398	5382398
32	Washer, Brg. Spacer	1	1055828	1055828
33	Bearing Cover	1	5396278	5396278
34	Screw, Bearing Cover	2	132146	132146
35	Lockwasher, Bearing Cover	2	106497	106497
36	Thru Bolt, End Frame	2	1066977	1066977
37	Lockwasher, Thru Bolt	2	103319	103319
38	Cable Fitting	1	5396284	5396284
39	Plug Assembly	1	1079622	1079622
40	Name Plate	1	5308735	5308735
41	Drive Screw, Name Plate	2	5327153	5327153

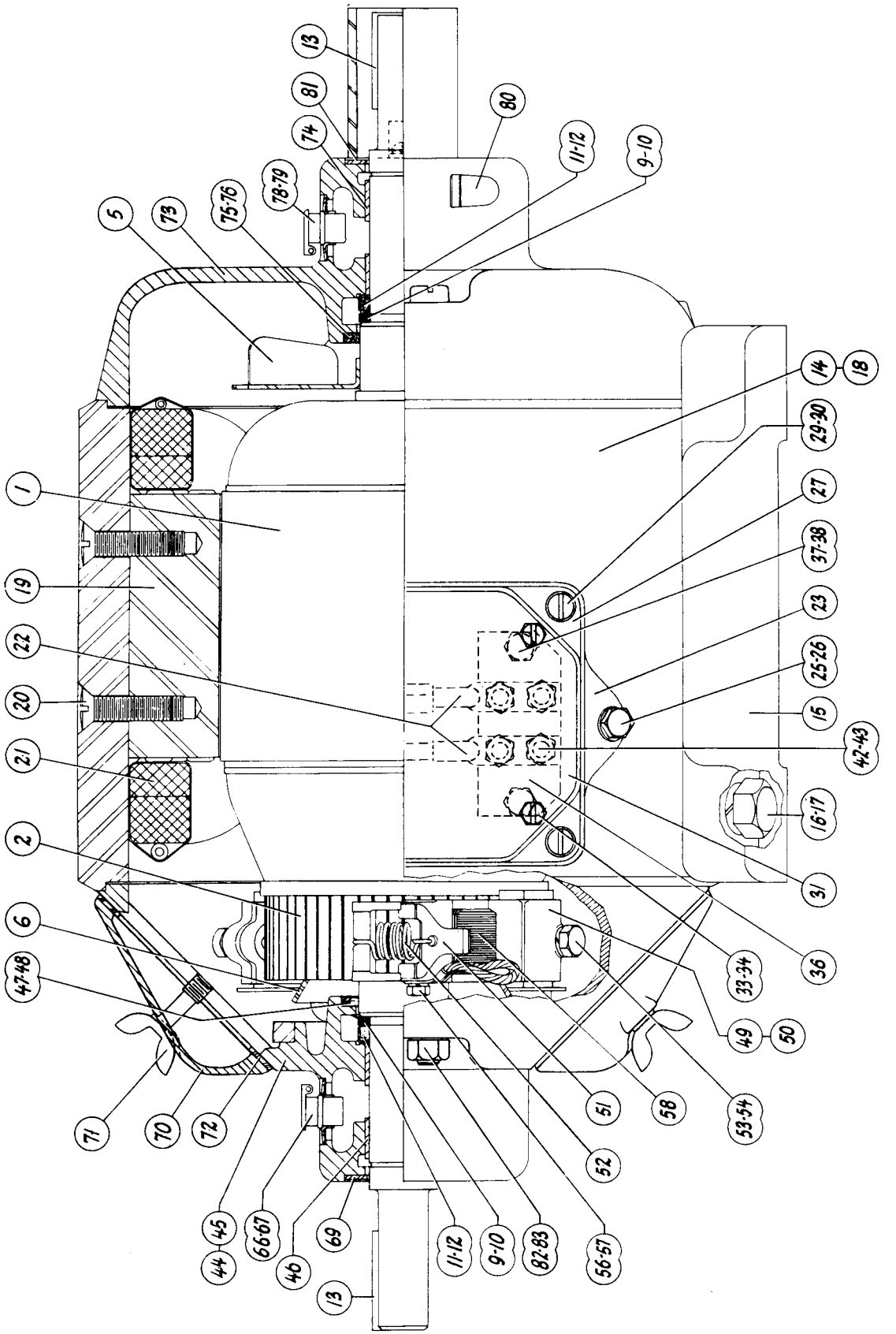

MODELS A-7740, A-7742, A-7746

MOTOR REPLACEMENT PARTS

Illus. No.	Description	Quantity Per Unit	A-7740	A-7742	A-7746
1	Armature and Fan Assem.	1	5340505	1069656	1069642
2	Commutator Assem.	1	5319239	5319239	5319230
3 *	Insulating Tube	1	5396362	5396362	5396362
4 *	Insulating Tube	2	039294	039294	039294
5	Fan	1	042243	042243	042243
6	Balance Disc	1	1072389	1072389	1072389
7 *	Balance Weight	1	038194	038194	038194
8 *	Balance Weight	1	038195	038195	038195
9	Thrust Washer (.010 in.)	2	043145	043145	043145
10	Thrust Washer (.020 in.)	1	037613	037613	037613
11	Steel Collar, Oil Thrower	2	5305072	5305072	5305072
12	Cork Washer, Oil Thrower	2	5305071	5305071	5305071
13	Key, Shaft	2	048488	048488	048488
14	Base, Frame and Coil Assem.	1	5511680	5511681	5512045
15	Base	1	1064517	1064517	1064517
16	Screw, Base Mounting	4	120650	120650	215735
17	L.W., Base Mounting	4	103323	103323	103323
18	Frame	1	5306887	5306887	5335364
19	Pole Piece	2	1058641	1058641	1056841
20	Screw, Pole Piece Mounting	4	1070426	1070426	1070426
21	Field Coil Assem.	1	1069327	5393809	5393803
22	Terminal Lug	2	5306437	5306437	5306437
23	Adapter Plate, Conduit Box	1	5306439	5306439	-
24 *	Gasket, Adapter Plate	1	5340173	5340173	-
25	Bolt, Adapter Plate Mounting	2	121887	121887	-
26	L.W., Adapter Plate Mounting	2	103319	103319	-
27	Conduit Box	1	5386794	5386794	-
28 *	Gasket, Conduit Box	1	5389483	5389483	-
29	Screw, Conduit Box Mounting	4	044645	044645	-
30	L.W., Conduit Box Mounting	4	103319	103319	-
31	Cover, Conduit Box	1	5389481	5389481	-
32 *	Gasket, Conduit Box Cover	1	5389482	5389482	-
33	Screw, Conduit Box Cover Mounting	4	5321076	5321076	-
34	L.W., Conduit Box Cover Mounting	4	106497	106497	-
35 *	Nipple, Conduit Box	1	5393357	5393357	5365448
36	Terminal Board	1	5306399	5306399	-
37	Bolt, Terminal Board Mounting	2	121900	121900	-
38	L.W., Terminal Board Mounting	2	103319	103319	-
39 *	Spacer, Terminal Board Mounting	2	5306438	5306438	-
40 *	Bolt, Terminal Connector	4	5306882	5306882	-
41 *	Bracket, Terminal Bolt Locking	2	5306883	5306883	-
42	Nut, Terminal Connector	8	113739	113739	-
43	L.W., Terminal Nut	4	103319	103319	-
44	End Frame and Brush Holder Assem.	1	5340340	5340340	5340341
45	End Frame and Bearing Assem.	1	5391104	5391104	5391104
46	Bearing	1	1057141	1057141	1057141
47	Felt Seal	1	1067944	1067944	1067944
48	Washer, Seal Retainer	1	1068592	1068592	1068592
49	Brush Holder and Bracket Assem.	1	5396355	5396355	5396356
50	Brush Holder	2	5364114	5364114	5312458
51	Brush Arm	2	5354004	5354004	5354004
52	Brush Spring	2	1066014	1066014	049835
53	Bolt, Brush Holder Mounting	2	046369	046369	046369
54	L.W., Brush Holder Mounting	2	103319	103319	103319
55 *	Insulating Tube, Br. Holder	2	5364170	5364170	5364170
56	Screw, Brush Lead Terminal	2	1065723	1065723	1065723
57	L.W., Brush Lead Terminal	2	106497	106497	106497
58	Brush	2	5340170	5340170	5308736
59 *	Bolt, Brush Bracket Locking	1	5364172	5364172	5364172
60 *	Nut, Brush Bracket Locking	1	120375	120375	120375
61 *	L.W., Brush Bracket Locking	1	103319	103319	103319
62 *	Bolt, Brush Bracket Mounting	1	037972	037972	037972

* - Not illustrated

(Continued on next page)

MOTOR REPLACEMENT PARTS (Continued)

Illus. No.	Description	Quantity Per Unit	A-7740	A-7742	A-7746
63 *	Nut, Brush Bracket Mounting	1	5337834	5337834	5337834
64 *	L.W., Brush Bracket Mounting	1	106497	106497	106497
65 *	Wicking, Oil Reservoir	1	037654	037654	037654
66	Oiler, Upper	1	5319468	5319468	5319468
67	Expansion Plug, Oiler Mounting	1	5319469	5319469	5319469
68 *	Oiler, Lower	1	5320447	5320447	5320447
69	Expansion Plug, Shaft Extension	1	1064955	1064955	1064955
70	Cover Plate, End Frame	2	5333077	5333077	5333077
71	Thumbscrew, Cover Plate Mounting	4	5306893	5306893	5306893
72	Gasket, Cover Plate	2	5309450	5309450	5309450
73	End Frame and Bearing Assem. (Opp. C.E.)	1	5306890	5306890	5306890
74	Bearing	1	1057141	1057141	1057141
75	Felt Seal	1	1067944	1067944	1067944
76	Washer, Seal Retainer	1	1068592	1068592	1068592
77 *	Wicking, Oil Reservoir	1	037654	037654	037654
78	Oiler, Upper	1	5319468	5319468	5319468
79	Expansion Plug, Oiler Mounting	1	5319469	5319469	5319469
80	Oiler, Lower	1	5320447	5320447	5320447
81	Expansion Plug, Shaft Extension	1	1064955	1064955	1064955
82	Thru Bolt, End Frame Mounting	2	1069191	1069191	1069191
83	Nut, Thru Bolt	2	042454	042454	042454
84 *	Name Plate	1	5365449	5365449	5365449
85 *	Drive Screw, Name Plate	2	5327153	5327153	5327153

* - Not illustrated

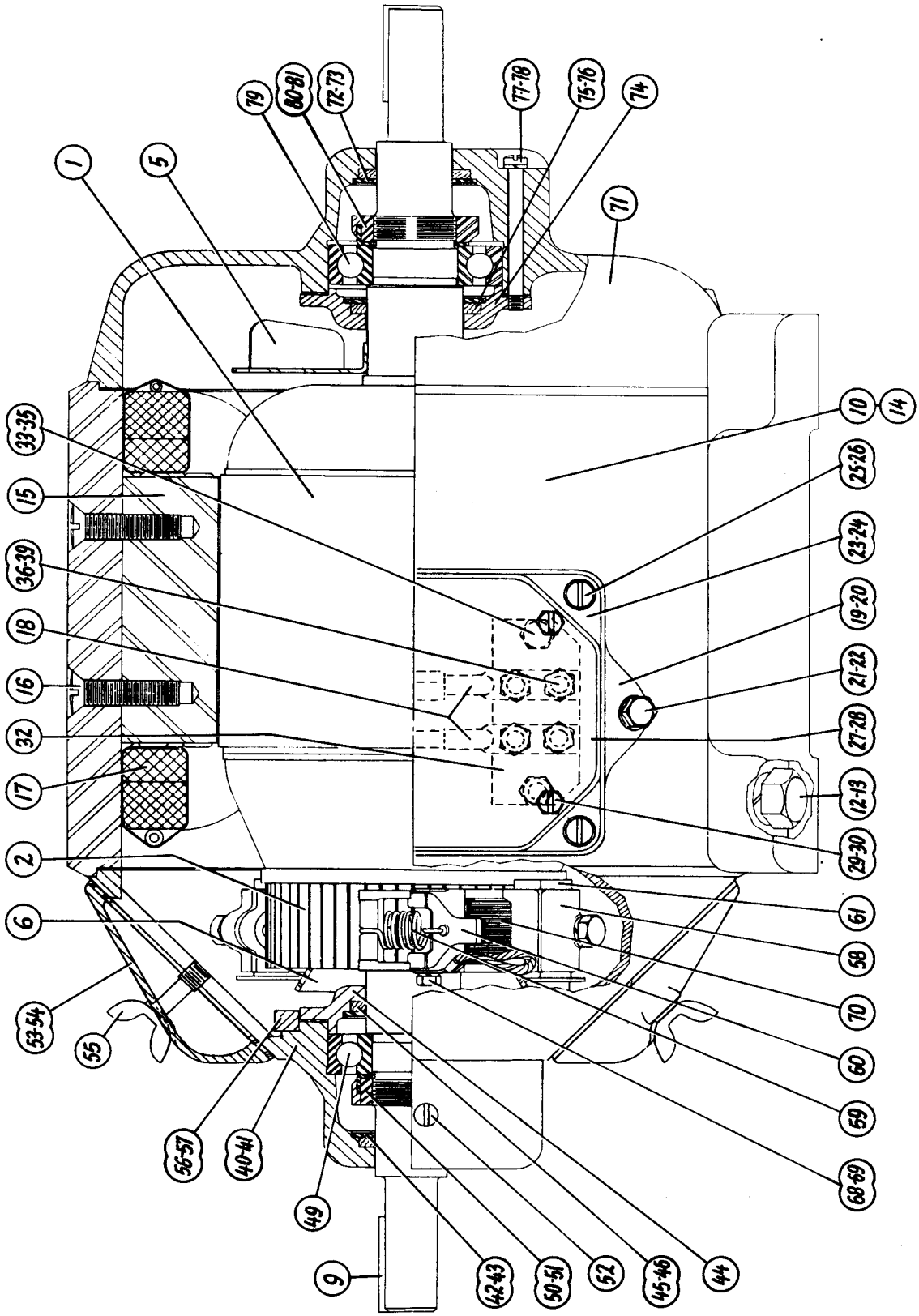

MODELS A-7743, A-7745

MOTOR REPLACEMENT PARTS

Illus. No.	Description	Quantity Per Unit	A-7743	A-7745
1	Armature & Fan Assem.	1	5399370	5365478
2	Commutator Assem.	1	5319239	5319239
3*	Insulating Tube	2	039294	039294
4*	Insulating Tube	1	5396362	5396362
5	Fan	1	042243	042243
6	Balance Disc	1	1072389	1072389
7*	Balance Weight	3	038194	038194
8*	Balance Weight	3	038195	038195
9	Key, Shaft	1	048488	048488
10	Base, Frame & Coil Assem.	1	5511680	5511681
11	Base	1	1064517	1064517
12	Screw, Base Mounting	4	215735	215735
13	L. W., Base Mounting	4	103323	103323
14	Frame	1	5306887	5306887
15	Pole Piece	2	1058641	1058641
16	Screw, Pole Piece Mounting	4	1070426	1070426
17	Field Coil Assem.	1	1069327	5393809
18	Terminal Lug	2	5306437	5306437
19	Adapter Plate, Conduit Box	1	5306439	5306439
20	Gasket, Adapter Plate	1	5340173	5340173
21	Bolt, Adapter Plate Mounting	2	121887	121887
22	L. W., Adapter Plate Mounting	2	103319	103319
23	Conduit Box	1	5386794	5386794
24	Gasket, Conduit Box	1	5389483	5389483
25	Screw, Conduit Box Mounting	4	044645	044645
26	L. W., Conduit Box Mounting	4	103319	103319
27	Cover, Conduit Box	1	5389481	5389481
28	Gasket, Conduit Box Cover	1	5389482	5389482
29	Screw, Conduit Box Cover Mounting	4	5321076	5321076
30	L. W., Conduit Box Cover Mounting	4	106497	106497
31*	Nipple, Conduit Box	1	5393357	5393357
32	Terminal Board	1	5306399	5306399
33	Bolt, Terminal Board Mounting	2	121900	121900
34	L. W., Terminal Board Mounting	2	103319	103319
35	Spacer, Terminal Board Mounting	2	5306438	5306438
36	Bolt, Terminal Connector	4	5306882	5306882
37	Bracket, Terminal Bolt Locking	2	5306883	5306883
38	Nut, Terminal Connector	8	113739	113739
39	L. W., Terminal Nut	4	103319	103319
40	End Frame & Brush Holder Assem.	1	5340342	5340342
41	End Frame	1	5357155	5357155
42	Felt Seal	1	1079138	1079138
43	Washer, Seal Retainer	1	1070518	1070518
44	Bearing Cover	1	5351658	5351658
45	Felt Seal	1	1070537	1070537
46	Washer, Seal Retainer	1	1070514	1070514
47*	Screw, Bearing Cover Mounting	3	132158	132158
48*	L. W., Bearing Cover Mounting	3	106497	106497
49	Ball Bearing	1	5379898	5379898
50	Locknut, Bearing	1	1071139	1071139
51	Lockwasher, Bearing	1	1067505	1067505
52	Pipe Plug, Bearing Reservoir	2	1062157	1062157
53	Cover Plate, End Frame	2	5333077	5333077
54	Gasket, Cover Plate	2	5309450	5309450
55	Thumbscrew, Cover Plate	4	5306893	5306893
56	Brush Bracket & Holder Assem.	1	5396355	5396355
57	Brush Bracket	1	5364174	5364174
58	Brush Holder	2	5364114	5364114
59	Brush Spring	2	1066014	1066014
60	Brush Arm	2	5354004	5354004
61	Insulating Tube, Brush Stud	2	5364170	5364170
62*	Bolt, Bracket Locking (Top)	1	5364172	5364172
63*	Nut, Bracket Locking (Top)	1	120375	120375

* - Not illustrated

(Continued on next page)

MOTOR REPLACEMENT PARTS (Continued)

Illus. No.	Description	Quantity Per Unit	A-7743	A-7745
64*	L. W., Bracket Locking (Top)	1	103319	103319
65*	Bolt, Bracket Locking (Bottom)	1	037972	037972
66*	Nut, Bracket Locking (Bottom)	1	5337834	5337834
67*	L. W., Bracket Locking (Bottom)	1	106497	106497
68	Screw, Brush Lead Terminal	2	1065723	1065723
69	L. W., Brush Lead Terminal	2	106496	106496
70	Brush	2	5340170	5340170
71	End Frame, (Opp. Comm. End)	1	5357156	5357156
72	Felt Seal	1	1079138	1079138
73	Washer, Seal Retainer	1	1070518	1070518
74	Bearing Cover	1	5351659	5351659
75	Felt Seal	1	1070537	1070537
76	Washer, Seal Retainer	1	1070514	1070514
77	Screw, Bearing Cover Mounting	3	132158	132158
78	L. W., Bearing Cover Mounting	3	106497	106497
79	Ball Bearing	1	5379898	5379898
80	Locknut, Bearing	1	1071139	1071139
81	Lockwasher, Bearing	1	1067505	1067505
82	Pipe Plug, Bearing Reservoir	2	1062157	1062157
83*	Thru Bolt, End Frame Mounting	2	1069191	1069191
84*	Nut, Thru Bolt	2	042454	042454
85*	Name Plate	1	5365449	5365449
86*	Drive Screw, Name Plate	2	5325153	5327153

* - Not illustrated

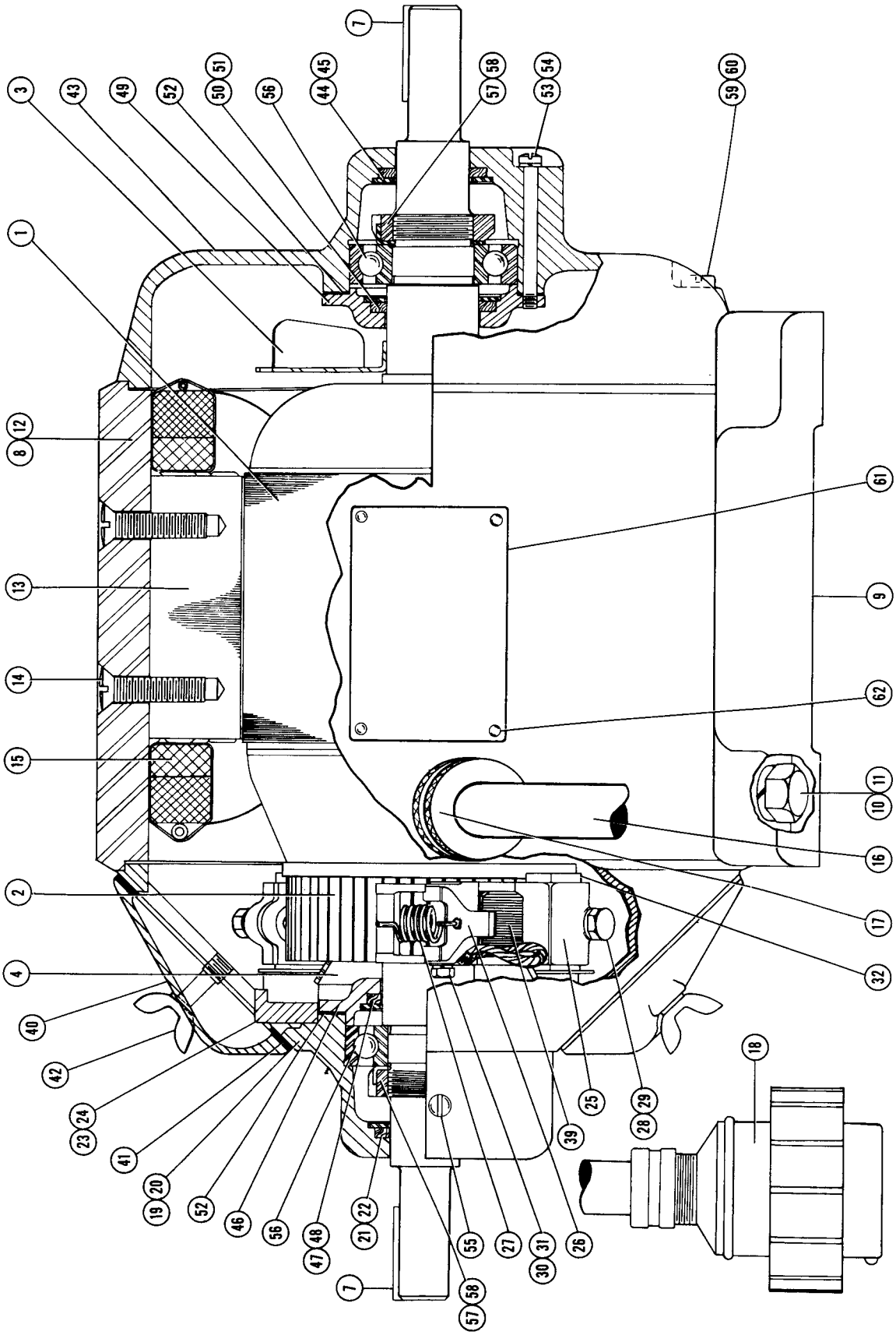

MODELS A-8303, A-8304, A-8309, A-8310, A-8311

MOTOR REPLACEMENT PARTS

Illus. No.	Description	Quantity Per Unit	A-8303	A-8304	A-8309	A-8310	A-8311
1	Armature and Fan Assembly	1	5399371	5514955	5365476	5365475	5365477
2	Commutator Assembly	1	5319239	5319239	5319234	5319231	5319230
3	Fan	1	042243	042243	042243	042243	042243
4	Balance Disc	1	1072389	1072389	1072389	1072389	1072389
*5	Balance Weight	3	038194	038194	038194	038194	038194
*6	Balance Weight	3	038195	038195	038195	038195	038195
7	Key, Shaft Extension	2	-	-	048488	048488	048488
8	Base, Frame and Coil Assembly	1	5514960	5514961	5514966	5514965	5514967
9	Base	1	1064517	1064517	1064517	1064517	1064517
10	Bolt, Base Mounting	4	215735	215735	215735	215735	215735
11	Lockwasher, Base Mounting	4	103323	103323	103323	103323	103323
12	Frame	1	5512635	5512635	5512635	5512635	5512635
13	Pole Piece	2	1058641	1058641	1058641	1058641	1058641
14	Screw, Pole Piece Mounting	4	1070426	1070426	1070426	1070426	1070426
15	Field Coil Assembly	1	1069324	5393806	1069321	5393800	5393803
16	Cable, Lead Assembly	1	5514981	5514980	5374484	5374483	5374483
17	Connector, Cable	1	5377264	5344617	5512636	5512632	5512632
18	Plug, Receptacle	1	5514982	5514983	5512631	1057998	1057998
19	End Frame and Brush Holder Assembly	1	5340342	5340342	5340342	5340343	5340343
20	End Frame	1	5357155	5357155	5357155	5357155	5357155
21	Felt Seal	1	1079138	1079138	1079138	1079138	1079138
22	Washer, Seal Retaining	1	1070518	1070518	1070518	1070518	1070518
23	Brush Bracket and Holder Assembly	1	5396355	5396355	5396355	5396356	5396356
24	Bracket	1	5364174	5364174	5364174	5364174	5364174
25	Brush Holder	2	5364114	5364114	5364114	5312458	5312458
26	Arm, Brush Holder	2	5354004	5354004	5354004	5354004	5354004
27	Spring, Brush Arm	2	1066014	1066014	1066014	049835	049835
28	Bolt, Brush Holder Clamp	2	046369	046369	046369	046369	046369
29	Lockwasher, Brush Holder Clamp	2	103319	103319	103319	103319	103319
30	Screw, Brush and Field Lead Terminal	4	1065723	1065723	1065723	1065723	1065723
31	Lockwasher, Brush and Field Lead Terminal	4	106497	106497	106497	106497	106497
32	Insulating Tube, Brush Stud	2	5364170	5364170	5364170	5364170	5364170
*33	Bolt, Bracket Locking (Top)	1	5364172	5364172	5364172	5364172	5364172
*34	Nut, Bracket Locking (Top)	1	120375	120375	120375	120375	120375
*35	Lockwasher, Bracket Locking (Top)	1	103319	103319	103319	103319	103319
*36	Bolt, Bracket Locking (Bottom)	1	037972	037972	037972	037972	037972
*37	Nut, Bracket Locking (Bottom)	1	5337834	5337834	5337834	5337834	5337834
*38	Lockwasher, Bracket Locking (Bottom)	1	106497	106497	106497	106497	106497
39	Brush	2	5340170	5340170	5340170	5308736	5308736
40	Cover Plate, End Frame	2	5333077	5333077	5333077	5333077	5333077
41	Gasket, Cover Plate	2	5309450	5309450	5309450	5309450	5309450
42	Thumb Screw, Cover Plate	4	5306893	5306893	5306893	5306893	5306893
43	End Frame (Opposite Commutator End)	1	5357156	5357156	5357156	5357156	5357156
44	Felt Seal	1	1079138	1079138	1079138	1079138	1079138
45	Washer, Seal Retaining	1	1070518	1070518	1070518	1070518	1070518
46	Bearing Cover (Commutator End)	1	5351658	5351658	5351658	5351658	5351658
47	Felt Seal	1	1070537	1070537	1070537	1070537	1070537
48	Washer, Seal Retaining	1	1070514	1070514	1070514	1070514	1070514
49	Bearing Cover (Opposite Commutator End)	1	5351659	5351659	5351659	5351659	5351659
50	Felt Seal	1	1070537	1070537	1070537	1070537	1070537
51	Washer, Seal Retaining	1	1070514	1070514	1070514	1070514	1070514
52	Gasket, Bearing Cover	2	5351655	5351655	5351655	5351655	5351655
53	Screw, Bearing Cover Mounting	6	106497	106497	106497	106497	106497
54	Lockwasher, Bearing Cover Mounting	6	132158	132158	132158	132158	132158
55	Pipe Plug, Bearing Reservoir	4	1062157	1062157	1062157	1062157	1062157
56	Ball Bearing	2	5379898	5379898	5379898	5379898	5379898
57	Locknut, Bearing	2	1071139	1071139	1071139	1071139	1071139
58	Lockwasher, Bearing	2	1067505	1067505	1067505	1067505	1067505
59	Thru Bolt, End Frame Mounting	2	1069191	1069191	1069191	1069191	1069191
60	Nut, Thru Bolt	2	042454	042454	042454	042454	042454
61	Name Plate	1	5365449	5365449	5365449	5365449	5365449
62	Drive Screw, Name Plate	4	1061405	1061405	1061405	1061405	1061405

 * - Not Illustrated

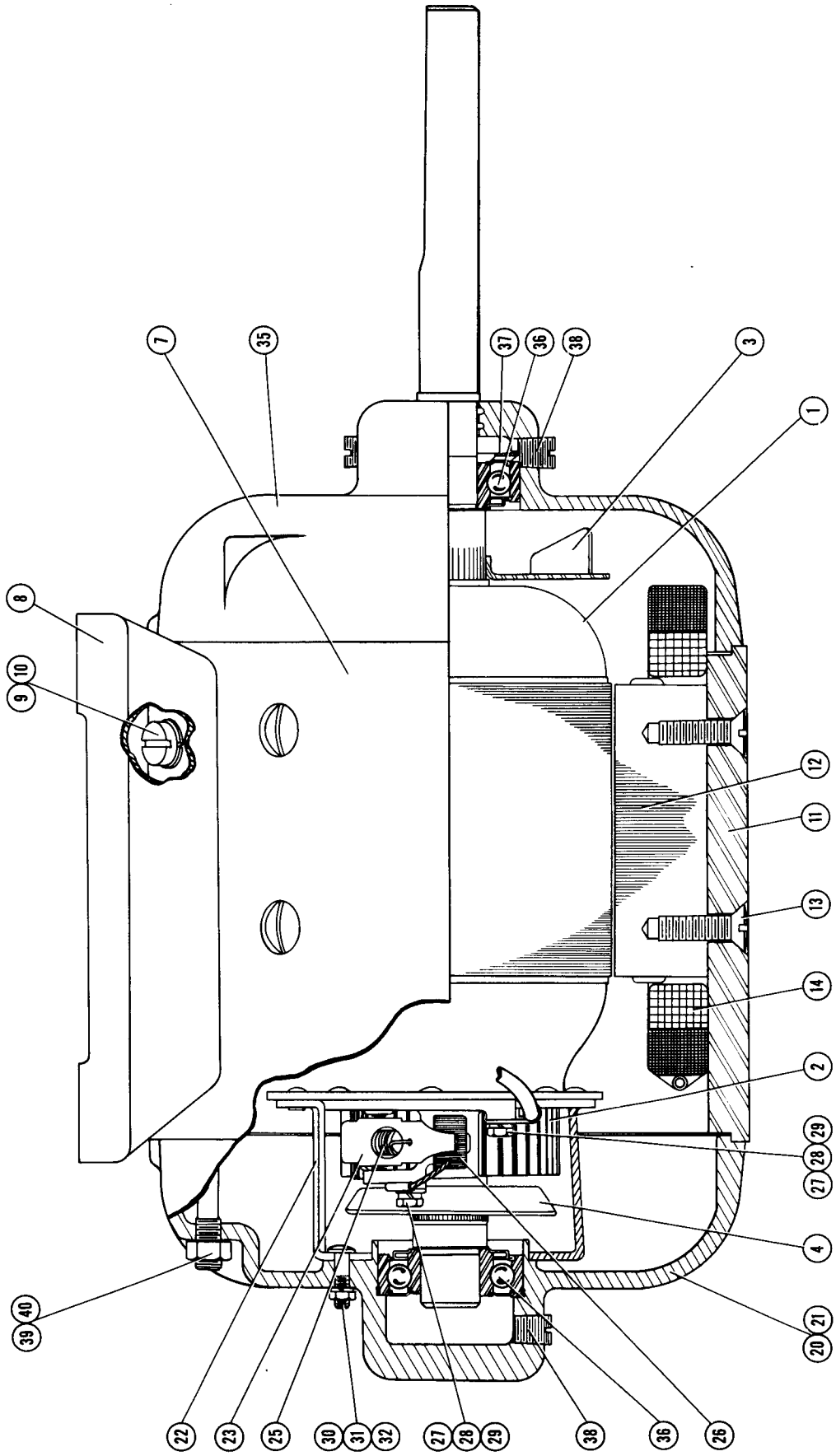

MODELS A-8306, A-8307, A-8308

MOTOR REPLACEMENT PARTS

Illus. No.	Description	Quantity Per Unit	A-8306	A-8307	A-8308
1	Armature Assembly	1	5320642	5320643	5320642
2	Commutator	1	038973	039232	038973
3	Fan	1	043635	043635	043635
4	Balance Disc	1	5319079	5319079	5319079
*5	Balance Weight	3	5356433	5356433	5356433
*6	Balance Weight	3	038194	038194	038194
7	Base, Frame and Coil Assembly	1	5337570	5373356	5398255
8	Base	1	5300731	5300731	5300731
9	Screw, Base Mounting	4	132330	132330	132330
10	Lockwasher, Base Mounting	4	103320	103320	103320
11	Frame	1	5337576	5337576	5337576
12	Pole Piece	2	043632	043632	043632
13	Screw, Pole Piece Mounting	4	036776	036776	036776
14	Field Coil Assembly	1	043754	5341852	043754
*15	Rubber Bushing, Lead Thru Frame	2	041808	041808	041808
*16	Capacitor, Suppressor	2	1880376	1880376	1880376
*17	Screw, Capacitor Mounting	2	115402	115402	115402
*18	Lockwasher, Capacitor Mounting	2	106497	106497	106497
*19	Lug, Terminal	3	1053856	1053856	1053856
20	End Frame and Brush Bracket Assembly	1	1073195	1073196	1073195
21	End Frame	1	5398108	5398108	5398108
22	Brush Bracket Assembly	1	1073170	1073171	1073170
23	Arm, Brush Holder	2	1061269	1061269	1061269
*24	Screw, Brush Arm Pivot	4	1059994	1059994	1059994
25	Spring, Brush Holder	2	1061279	1061279	1061279
26	Brush	2	1061463	1073152	1061463
27	Screw, Brush and Field Lead Terminal	4	5316173	5316173	5316173
28	Lockwasher, Brush and Field Lead Terminal	4	106497	106497	106497
29	Washer, Brush and Field Lead Terminal	2	042663	042663	042663
30	Bolt, Brush Bracket Locking	2	037972	037972	037972
31	Nut, Brush Bracket Locking	2	049681	049681	049681
32	Lockwasher, Brush Bracket Locking	2	106497	106497	106497
*33	Cover Plate, End Frame	2	1064969	1064969	1064969
*34	Screw, Cover Plate	4	042453	042453	042453
35	End Frame (Opposite Commutator End)	1	1061803	1061803	1061803
36	Bearing (Ball)	2	1064217	1064217	1064217
37	Spring Washer, Bearing	1	5300356	5300356	5300356
38	Plug, Bearing Reservoir	4	1062157	1062157	1062157
39	Thru Bolt	2	1069253	1069253	1069253
40	Nut, Thru Bolt	2	042455	042455	042455
*41	Name Plate	1	5326701	5326701	5326701
*42	Drive Screw, Name Plate Mounting	2	1061405	1061405	1061405

MOTOR REPLACEMENT PARTS

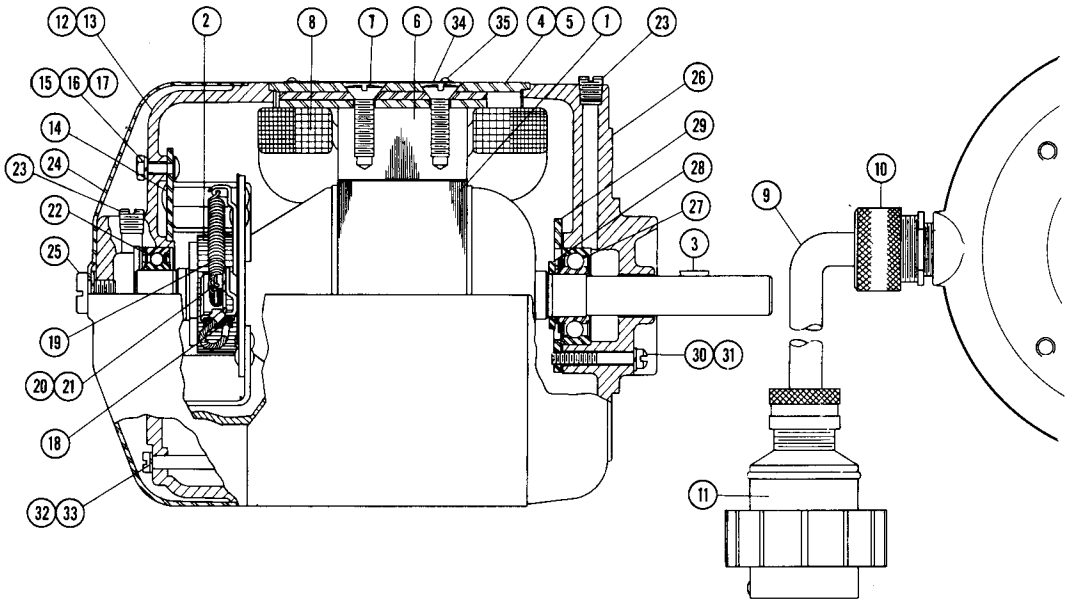

MODELS A-8312, A-8313, A-8317, A-8328

Illus. No.	Description	Quantity Per Unit	A-8312	A-8313	A-8317	A-8328
1	Armature Assembly	1	5515160	5515161	5515161	5515160
2	Commutator	1	045967	045964	045964	045967
3	Key, Shaft Extension	1	106749	106749	106749	106749
4	Frame and Coil Assembly	1	5515155	5515156	5515158	5515157
5	Frame	1	5515171	5515171	5515171	5515171
6	Pole Piece	2	5333975	5333975	5333975	5333975
7	Screw, Pole Piece Mounting	4	036776	036776	036776	036776
8	Field Coil Assembly	1	5373009	5373012	5373012	5373009
9	Cable, Lead Assembly	1	5515169	5515169	5308984	1056695
10	Connector, Cable	1	5396284	5396284	5396284	5396284
11	Plug, Receptacle	1	5515166	5515166	5515166	5515166
12	End Frame and Brush Bracket Assembly	1	5356811	5356812	5356812	5356811
13	End Frame	1	5515165	5515165	5515165	5515165
14	Brush Bracket	1	5333926	5333926	5333926	5333926
15	Bolt, Bracket Locking	2	5336056	5336056	5336056	5336056
16	Nut, Bracket Locking	2	5337834	5337834	5337834	5337834
17	Lockwasher, Bracket Locking	2	106497	106497	106497	106497
18	Brush	2	1059009	043936	043936	1059009
19	Spring, Brush	2	036304	036304	036304	036304
20	Screw, Brush and Field Lead Terminal	2	131954	131954	131954	131954
21	Lockwasher, Brush and Field Lead Terminal	2	106496	106496	106496	106496
22	Ball Bearing (Commutator End)	1	5340769	5340769	5340769	5340769
23	Pipe Plug, Bearing Reservoir	4	1062157	1062157	1062157	1062157
24	Drip Shield, End Frame	1	5515168	5515168	5515168	5515168
25	Screw, Shield Mounting	1	5515167	5515167	5515167	5515167
26	End Frame (Drive End)	1	5340766	5340766	5340766	5340766
27	Ball Bearing (Drive End)	1	1064218	1064218	1064218	1064218
28	Washer, Bearing Spacer	1	1055828	1055828	1055828	1055828
29	Plate, Bearing Retaining	1	5396278	5396278	5396278	5396278
30	Screw, Plate Mounting	2	132146	132146	132146	132146
31	Lockwasher, Plate Mounting	2	106497	106497	106497	106497
32	Thru Bolt, End Frame Mounting	2	1066972	1066972	1066972	1066972
33	Lockwasher, Thru Bolt	2	103319	103319	103319	103319
34	Name Plate	1	5308735	5308735	5308735	5308735
35	Drive Screw, Name Plate Mounting	2	1061405	1061405	1061405	1061405

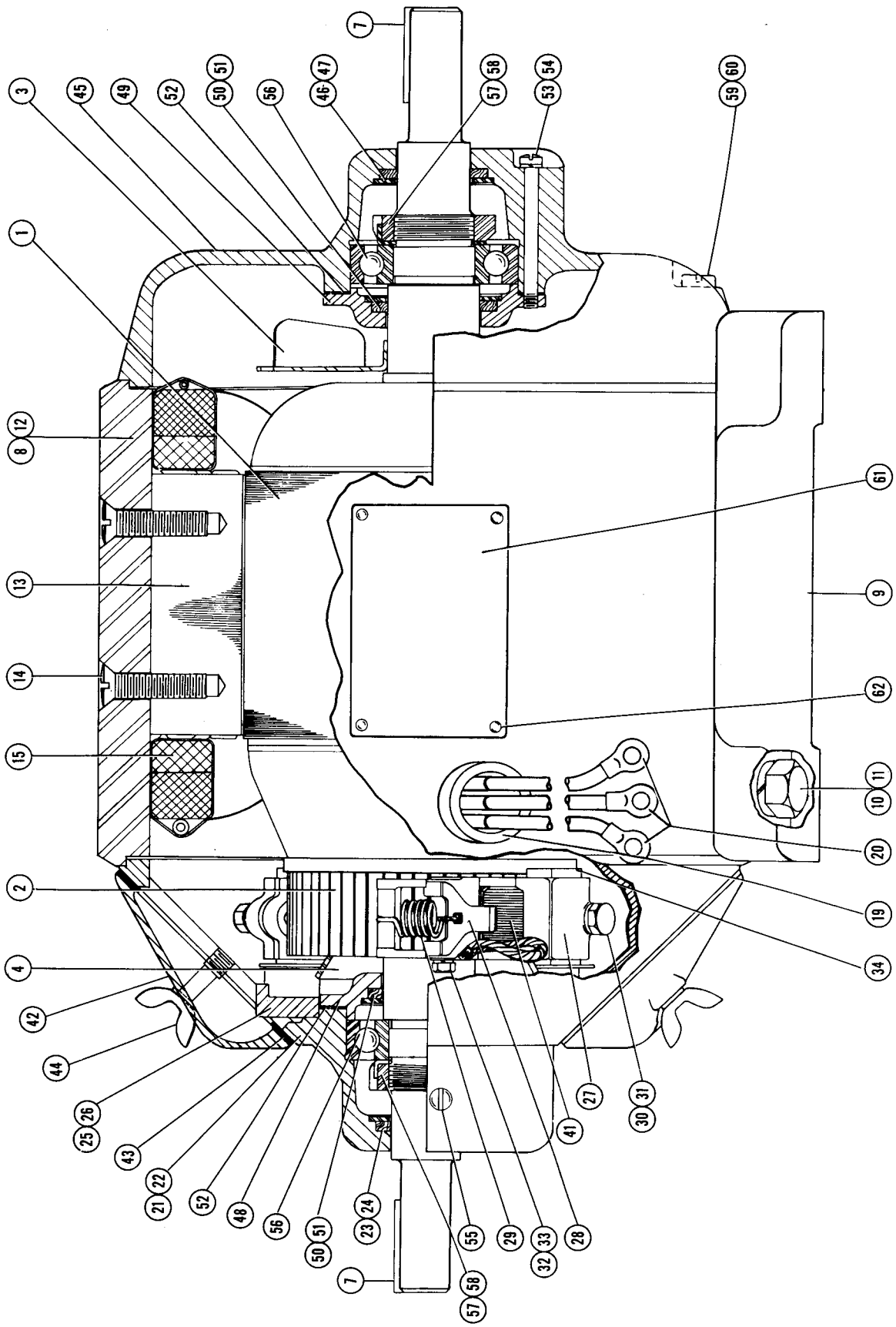

MODELS A-8315, A-8316, A-8318, A-8319, A-8320, A-8321, A-8322, A-8323, A-8324

MOTOR REPLACEMENT PARTS

Illus. No.	Description	Quantity Per Unit	A-8315	A-8316	A-8318	A-8319	A-8320
1	Armature and Fan Assembly	1	5365476	5335465	5365476	5365475	5365477
2	Commutator	1	5319234	5319234	5319234	5319231	5319230
3	Fan	1	042243	042243	042243	042243	042243
4	Balance Disc	1	1072389	1072389	1072389	1072389	1072389
*5	Balance Weight	3	038194	038194	038194	038194	038194
*6	Balance Weight	3	038195	038195	038195	038195	038195
7	Key, Shaft Extension	2	048488	048488	048488	048488	048488
8	Base, Frame and Coil Assembly	1	5396333	5512046	1075219	1075215	5337150
9	Base	1	1064517	1064517	1064517	1064517	1064517
10	Bolt, Base Mounting	4	215735	215735	215735	215735	215735
11	Lockwasher, Base Mounting	4	103323	103323	1033233	103323	103323
12	Frame	1	5396308	5335364	1068577	1068577	1068577
13	Pole Piece	2	1058641	1058641	1058641	1058641	1058641
14	Screw, Pole Piece Mounting	4	1070426	1070426	1070426	1070426	1070426
15	Field Coil Assembly	1	1069321	1069321	1069321	5393800	5393803
*16	Capacitor, Suppressor	2	1880376	-	1880376	1880376	1880376
*17	Screw, Capacitor Mounting	2	115402	-	115402	115402	115402
*18	Lockwasher, Capacitor Mounting	2	106497	-	106497	106497	106497
19	Nipple, Lead Conduit	1	5365448	5365448	5365448	5365448	5365448
20	Lug, Terminal	3	1053856	1053856	1053856	1053856	1053856
21	End Frame and Brush Holder Assembly	1	5340342	5340342	5340342	5340343	5340343
22	End Frame	1	5357155	5357155	5357155	5357155	5357155
23	Felt Seal	1	1079138	1079138	1079138	1079138	1079138
24	Washer, Seal Retaining	1	1070518	1070518	1070518	1070518	1070518
25	Brush Bracket and Holder Assembly	1	5396355	5396355	5396355	5396356	5396356
26	Bracket	1	5364174	5364174	5364174	5364174	5364174
27	Brush Holder	2	5364114	5364114	5364114	5312458	5312458
28	Arm, Brush Holder	2	5354004	5354004	5354004	5354004	5354004
29	Spring, Brush Holder	2	1066014	1066014	1066014	049835	049835
30	Bolt, Brush Holder Clamp	2	046369	046369	046369	046369	046369
31	Lockwasher, Brush Holder Clamp	2	103319	103319	103319	103319	103319
32	Screw, Brush and Field Lead Terminal	4	1065723	1065723	1065723	1065723	1065723
33	Lockwasher, Brush and Field Lead Terminal	4	106497	106497	106497	106497	106497
34	Tube, Brush Stud Insulating	2	5364170	5364170	5364170	5364170	5364170
*35	Bolt, Bracket Locking (Top)	1	5364172	5364172	5364172	5364172	5364172
*36	Nut, Bracket Locking (Top)	1	120375	120375	120375	120375	120375
*37	Lockwasher, Bracket Locking (Top)	1	103319	103319	103319	103319	103319
*38	Bolt, Bracket Locking (Bottom)	1	037972	037972	037972	037972	037972
*39	Nut, Bracket Locking (Bottom)	1	5337834	5337834	5337834	5337834	5337834
*40	Lockwasher, Bracket Locking (Bottom)	1	106497	106497	106497	106497	106497
41	Brush	2	5340170	5340170	5340170	5308736	5308736
42	Cover Plate, End Frame	2	5333077	5333077	5333077	5333077	5333077
43	Gasket, Cover Plate	2	5309450	5309450	5309450	5309450	5309450
44	Thumb Screw, Cover Plate	4	5306893	5306893	5306893	5306893	5306893
45	End Frame (Opposite Commutator End)	1	5357156	5357156	5357156	5357156	5357156
46	Felt Seal	1	1079138	1079138	1079138	1079138	1079138
47	Washer, Seal Retaining	1	1070518	1070518	1070518	1070518	1070518
48	Bearing Cover (Commutator End)	1	5351658	5351658	5351658	5351658	5351658
49	Bearing Cover (Opposite Commutator End)	1	5351659	5351659	5351659	5351659	5351659
50	Felt Seal, Bearing Cover	2	1070537	1070537	1070537	1070537	1070537
51	Washer, Seal Retaining	2	1070514	1070514	1070514	1070514	1070514
52	Gasket, Bearing Cover	2	5351655	5351655	5351655	5351655	5351655
53	Screw, Bearing Cover Mounting	6	106497	106497	106497	106497	106497
54	Lockwasher, Bearing Cover Mounting	6	132158	132158	132158	132158	132158
55	Pipe Plug, Bearing Reservoir	4	1062157	1062157	1062157	1062157	1062157
56	Ball Bearing	2	5379898	5379898	5379898	5379898	5379898
57	Locknut, Bearing	2	1071139	1071139	1071139	1071139	1071139
58	Lockwasher, Bearing	2	1067505	1067505	1067505	1067505	1067505
59	Thru Bolt, End Frame Mounting	2	1069191	1069191	1069191	1069191	1069191
60	Nut, Thru Bolt	2	042454	042454	042454	042454	042454
61	Name Plate	1	5365449	5365449	5365449	5365449	5365449
62	Drive Screw, Name Plate	4	1061405	1061405	1061405	1061405	1061405

* - Not Illustrated

MOTOR REPLACEMENT PARTS

Illus. No.	Description	Quantity Per Unit	A-8321	A-8322	A-8323	A-8324
1	Armature and Fan Assembly	1	5335465	5365479	5335466	5365475
2	Commutator	1	5319234	5319231	5319230	5319231
3	Fan	1	042243	042243	042243	042243
4	Balance Disc	1	1072389	1072389	1072389	1072389
*5	Balance Weight	3	038194	038194	038194	038194
*6	Balance Weight	3	038195	038195	038195	038195
7	Key, Shaft Fxtension	2	048488	048488	048488	048488
8	Base, Frame and Coil Assembly	1	1075219	1075215	5337150	1075215
9	Base	1	1064517	1064517	1064517	1064517
10	Bolt, Base Mounting	4	215735	215735	215735	215735
11	Lockwasher, Base Mounting	4	103323	103323	103323	103323
12	Frame	1	1068577	1068577	1068577	1068577
13	Pole Piece	2	1058641	1058641	1058641	1058641
14	Screw, Pole Piece Mounting	4	1070426	1070426	1070426	1070426
15	Field Coil Assembly	1	1069321	5393800	5393803	5393800
*16	Capacitor, Suppressor	2	1880376	1880376	1880376	1880376
*17	Screw, Capacitor Mounting	2	115402	115402	115402	115402
*18	Lockwasher, Capacitor Mounting	2	106497	106497	106497	106497
19	Nipple, Lead Conduit	1	5365448	5365448	5365448	5365448
20	Lug, Terminal	3	1053856	1053856	1053856	1053856
21	End Frame and Brush Holder Assembly	1	5340342	5340343	5340343	5340343
22	End Frame	1	5357155	5357155	5357155	5357155
23	Felt Seal	1	1079138	1079138	1079138	1079138
24	Washer, Seal Retaining	1	1070518	1070518	1070518	1070518
25	Brush Bracket and Holder Assembly	1	5396355	5396356	5396356	5396356
26	Bracket	1	5364174	5364174	5364174	5364174
27	Brush Holder	2	5364114	5312458	5312458	5312458
28	Arm, Brush Holder	2	5354004	5354004	5354004	5354004
29	Spring, Brush Holder	2	1066014	049835	049835	049835
30	Bolt, Brush Holder Clamp	2	046369	046369	046369	046369
31	Lockwasher, Brush Holder Clamp	2	103319	103319	103319	103319
32	Screw, Brush and Field Lead Terminal	4	1065723	1065723	1065723	1065723
33	Lockwasher, Brush and Field Lead Terminal	4	106497	106497	106497	106497
34	Tube, Brush Stud Insulating	2	5364170	5364170	5364170	5364170
*35	Bolt, Bracket Locking (Top)	1	5364172	5364172	5364172	5364172
*36	Nut, Bracket Locking (Top)	1	120375	120375	120375	120375
*37	Lockwasher, Bracket Locking (Top)	1	103319	103319	103319	103319
*38	Bolt, Bracket Locking (Bottom)	1	037972	037972	037972	037972
*39	Nut, Bracket Locking (Bottom)	1	5337834	5337834	5337834	5337834
*40	Lockwasher, Bracket Locking (Bottom)	1	107497	106497	106497	106497
41	Brush	2	5340170	5308736	5308736	5308736
42	Cover Plate, End Frame	2	5333077	5333077	5333077	5333077
43	Gasket, Cover Plate	2	5309450	5309450	5309450	5309450
44	Thumb Screw, Cover Plate	4	5306893	5306893	5306893	5306893
45	End Frame (Opposite Commutator End)	1	5357156	5357156	5357156	5357156
46	Felt Seal	1	1079138	1079138	1079138	1079138
47	Washer, Seal Retaining	1	1070518	1070518	1070518	1070518
48	Bearing Cover (Commutator End)	1	5351658	5351658	5351658	5351658
49	Bearing Cover (Opposite Commutator End)	1	5351659	5351659	5351659	5351659
50	Felt Seal, Bearing Cover	2	1070537	1070537	1070537	1070537
51	Washer, Seal Retaining	2	1070514	1070514	1070514	1070514
52	Gasket, Bearing Cover	2	5351655	5351655	5351655	5351655
53	Screw, Bearing Cover Mounting	6	106497	106497	106497	106497
54	Lockwasher, Bearing Cover Mounting	6	132158	132158	132158	132158
55	Pipe Plug, Bearing Reservoir	4	1062157	1062157	1062157	1062157
56	Ball Bearing	2	5379898	5379898	5379898	5379898
57	Locknut, Bearing	2	1071139	1071139	1071139	1071139
58	Lockwasher, Bearing	2	1067505	1067505	1067505	1067505
59	Thru Bolt, End Frame Mounting	2	1069191	1069191	1069191	1069191
60	Nut, Thru Bolt	2	042454	042454	042454	042454
61	Name Plate	1	5365449	5365449	5365449	5365449
62	Drive Screw, Name Plate	4	1061405	1061405	1061405	1061405

MOTOR REPLACEMENT PARTS

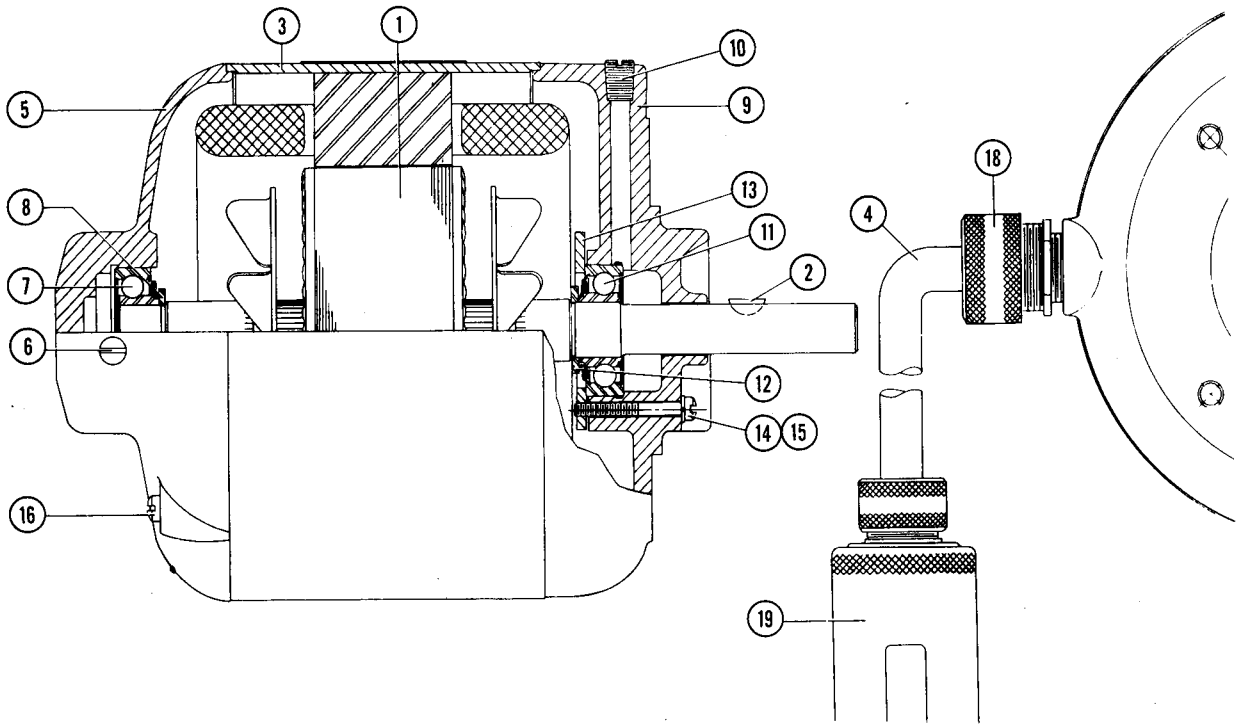

MODELS I-686, I-890

Illus. No.	Description	Quantity Per Unit	I-686	I-890
1	Rotor	1	5396290	5396290
2	Key, Shaft	1	106749	106749
3	Frame, Stator and Coil Assembly	1	5396300	5396301
4	Cable, Lead Assembly	1	5396283	1055361
5	End Frame, (Opposite Drive End)	1	5396273	5396273
6	Pipe Plug, Bearing Reservoir	2	1062157	1062157
7	Bearing	1	5382398	5382398
8	Washer, Bearing Spacer	1	1055828	1055828
9	End Frame (Drive End)	1	5396264	5396264
10	Pipe Plug, Bearing Reservoir	2	1062157	1062157
11	Bearing	1	5382398	5382398
12	Washer, Bearing Spacer	1	1055828	1055828
13	Bearing Cover	1	5396278	5396278
14	Screw, Bearing Cover	2	132146	132146
15	Lockwasher, Bearing Cover	2	106497	106497
16	Thru Bolt, End Frame	4	5338551	5338551
*17	Lockwasher, Thru Bolt	4	103319	103319
18	Cable Fitting	1	5396284	5396284
19	Plug Assembly	1	5396279	1053884
*20	Name Plate	1	5395563	5395563
*21	Drive Screw, Name Plate	2	5327153	5327153

* - Not Illustrated

MOTOR REPLACEMENT PARTS

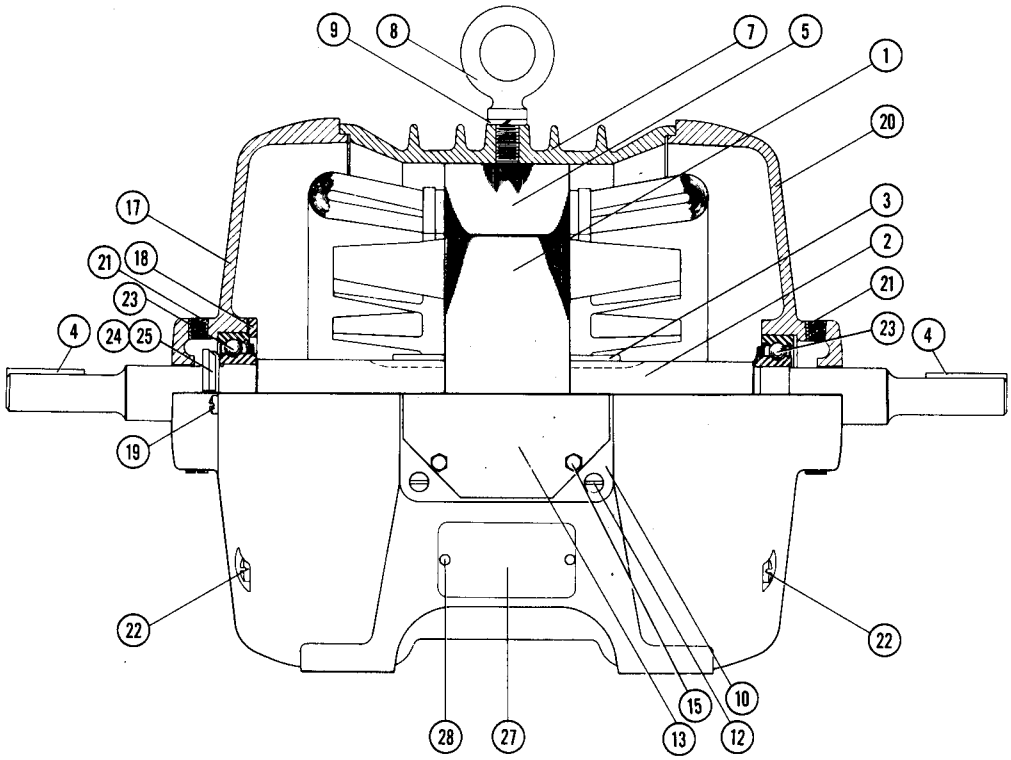

MODEL I-693

Illus. No.	Description	Quantity Per Unit	I-693
1	Rotor Assembly	1	5386805
2	Shaft	1	5397424
3	Key, Rotor Locking	1	5366361
4	Key, Shaft Extension	2	038078
5	Stator and Coil Assembly	1	5397605
*6	Pin, Stator to Frame Locking	2	5389459
7	Frame	1	5397428
8	Eyebolt	1	5320887
9	Lockwasher, Eyebolt	1	103323
10	Conduit Box	1	1069976
*11	Gasket, Conduit Box	1	5389483
12	Screw, Conduit Box Mounting	4	5388381
13	Cover, Conduit Box	1	5389481
*14	Gasket, Cover	1	5389482
15	Screw, Cover Mounting	4	5388380
*16	Nipple, Conduit Box	1	5397853
17	End Frame (Left, Facing Conduit Box)	1	5397539
18	Ring, Bearing Retaining	1	5391598
19	Screw, Retaining Ring Mounting	2	5388381
20	End Frame (Right, Facing Conduit Box)	1	5397538
21	Pipe Plug, Bearing Reservoir	4	1062157
22	Screw, End Frames Mounting	8	132365
23	Bearing	2	5382394
24	Locknut, Bearing	1	5397604
25	Lockwasher, Bearing	1	1067505
*26	Arrow, Rotation Indicating	1	5367210
27	Name Plate	1	5395563
28	Drive Screw, Arrow and Name Plate Mtg.	5	1061405

 * - Not Illustrated

MOTOR REPLACEMENT PARTS

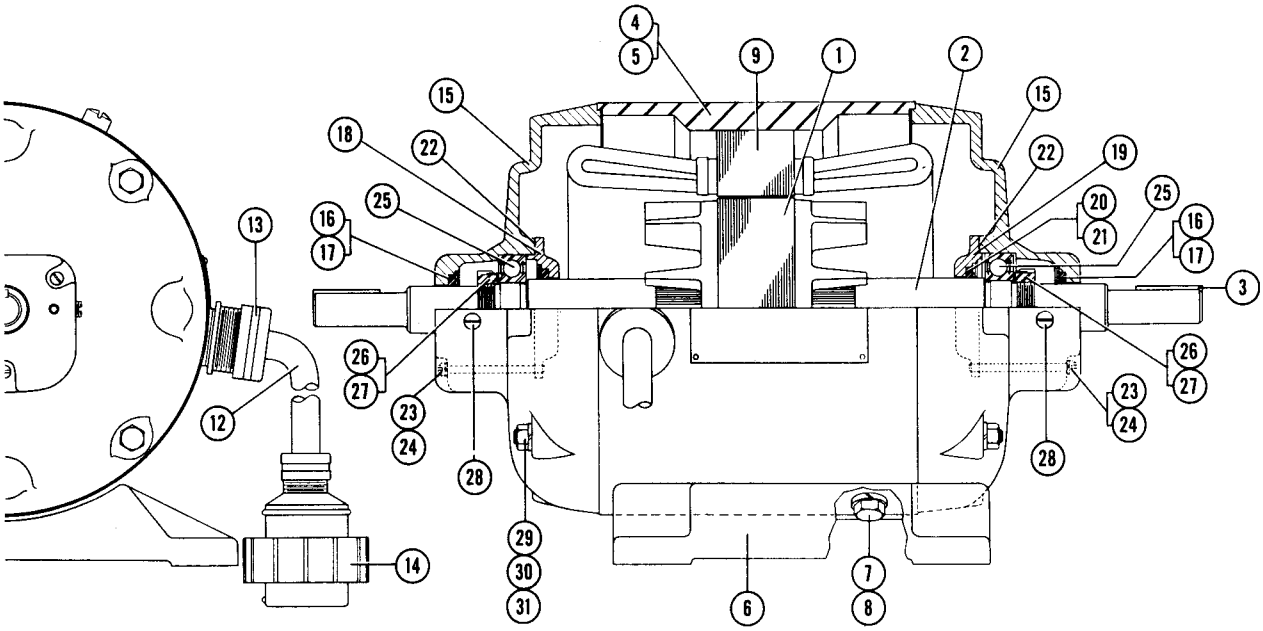

MODELS I-937, I-938, I-939, I-995

Illus. No.	Description	Quantity Per Unit	I-937	I-938	I-939	I-995
1	Rotor Assembly	1	1063925	1063927	1063926	1063926
2	Shaft	1	1055783	1055783	1055784	1055784
3	Key, Shaft Extension	2	048488	048488	-	-
4	Frame, Base, Stator and Coil Assembly	1	1067840	5317729	1067841	5317729
5	Frame	1	048979	5393153	048979	5393153
6	Base	1	5393149	5393149	5393149	5393149
7	Bolt, Base Mounting	4	120233	120233	120233	120233
8	Lockwasher, Base Mounting	4	103321	103321	103321	103321
9	Stator and Coil Assembly	1	5393976	5397090	5397091	5397090
*10	Screw or Pin, Stator Locking	2	5392226	102398	5392226	120398
*11	Nipple, Lead Conduit	1	-	5393357	-	5393357
12	Cable, Lead Assembly	1	1058792	-	1058793	-
13	Fitting, Cable to Frame	1	5512632	-	5512632	-
14	Plug, Receptacle	1	5512630	-	5512630	-
15	End Frame (Both Ends)	2	5364888	5364888	5364888	5364888
16	Felt Seal	2	1079138	1079138	1079138	1079138
17	Washer, Seal Retainer	2	1070518	1070518	1070518	1070518
18	Bearing Cover (Long Lip)	1	5351658	5351658	5351658	5351658
19	Bearing Cover (Short Lip)	1	5351659	5351659	5351659	5351659
20	Felt Seal, Bearing Cover	2	1070537	1070537	1070537	1070537
21	Washer, Seal Retainer	2	1070514	1070514	1070514	1070514
22	Gasket, Bearing Cover	2	5351655	5351655	5351655	5351655
23	Screw, Bearing Cover Retaining	6	132158	132158	132158	132158
24	Lockwasher, Bearing Cover Retaining	6	106497	106497	106497	106497
25	Ball Bearing	2	5379898	5379898	5379898	5379898
26	Locknut, Bearing Retaining	2	1071139	1071139	1071139	1071139
27	Lockwasher, Bearing Retaining	2	1067505	1067505	1067505	1067505
28	Pipe Plug, Bearing Reservoir	4	1062157	1062157	1062157	1062157
29	Thru Bolt	4	1069252	1069252	1069252	1069252
30	Nut, Thru Bolt	8	042455	042455	042455	042455
31	Lockwasher, Thru Bolt	8	103320	103320	103320	103320
32	Name Plate	1	5393358	5393358	5393358	5393358
33	Drive Screw, Name Plate	4	1061405	1061405	1060405	1060405

* - Not Illustrated

MOTOR REPLACEMENT PARTS

Description	Quantity Per Unit	I-683
Rotor & Shaft Assem.	1	5391706
Key, Shaft Extension	2	5301387
Frame, Stator & Coil Assem.	1	5396360
Block Lead Clamp	2	5339849
Plate, Clamp Block Mounting	1	5395933
Screw, Clamp Block Mounting	2	132335
Lockwasher, Clamp Block Mounting	2	103320
Terminal Lug	6	1075109
Conduit Box	1	5386794
Gasket, Conduit Box	1	5389483
Screw, Conduit Box Mounting	4	132268
Nipple, Conduit Box	1	5393357
Cover, Conduit Box	1	5389481
Gasket, Cover	1	5389482
Screw, Cover Mounting	4	5321076
Lockwasher, Cover Mounting	4	106497
Eyebolt	1	5320885
Lockwasher, Eyebolt	1	103321
End Frame (Opp. Drive End)	1	5395829
Pipe Plug, Brg. Reservoir	2	1062157
Ball Bearing	1	5382391
Plate, Brg. Outer Race Locking	1	5386712
Screw, Brg. Plate Retaining	2	132268
Lockwasher, Brg. Plate Retaining	2	103319
Locknut, Bearing Retaining	1	5314774
Lockwasher, Bearing Retaining	1	1059239
End Frame (Drive End)	1	5395828
Pipe Plug, Brg. Reservoir	2	1062157
Ball Bearing	1	5382391
Screw End Frames Mounting	8	132360
Arrow, Rotation Indicating	1	5367210
Name Plate	1	5395563
Drive Screw, Arrow & Name Plate	5	1061405

Section VI

ELECTRICAL EQUIPMENT

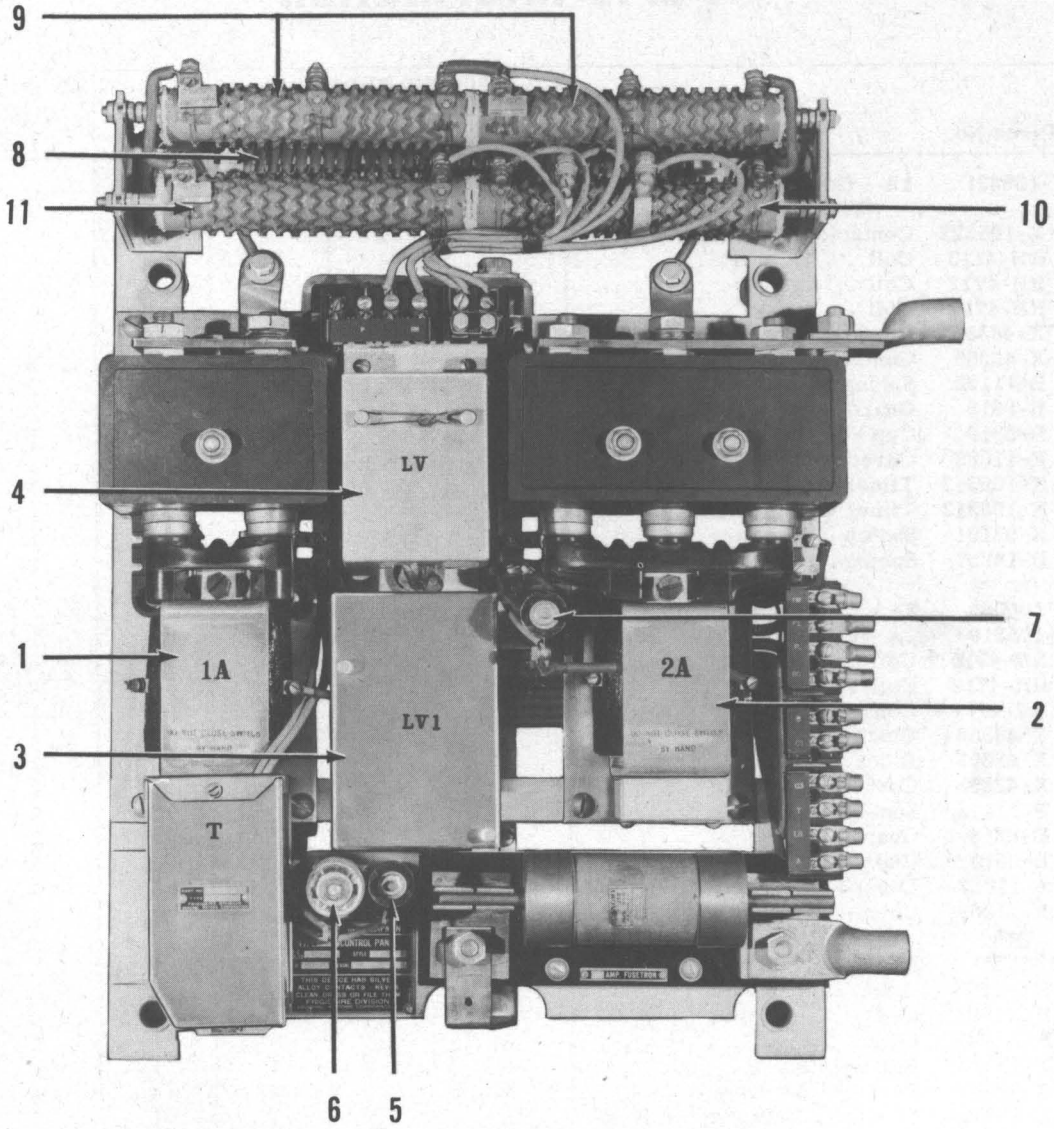

1. 1-A contactor and parts
2. 2-A contactor and parts
3. LV-1 relay and parts
4. LV-relay and parts
5. #1 resistor
6. #2 resistor
7. #3 resistor
8. Armature resistor
9. Upper field resistor
10. Lower RH field resistor
11. Lower LH field resistor

Typical Q Series Control Panel

TYPE "Q" SERIES CONTROL PANELS
Parts Information

Illus. No.	Piece No.	Description	EB-80604 QF 36 Volt	EB-80803 QH 126 Volt	EB-80965 QFX 36 Volt	EB-81029 QG 72 Volt	EB-81030 QGX 72 Volt	EB-81428 QGY 72 Volt
1	*X-105321	1A - Contactor Complete With Timer	1	1	1	1	1	1
	*X-105322	Contactor Only	1	1	1	1	1	1
	RH-4710	Coil	1	-	1	-	-	-
	RH-4712	Coil	-	1	-	-	-	-
	RH-4717	Coil	-	-	-	1	1	1
	X-48389	Block - Stationary Contact	1	1	1	1	1	1
	X-42365	Contact - Movable	2	2	2	2	2	2
	B-11133	Spring	2	2	2	2	2	2
	B-8318	Guard - Spring	2	2	2	2	2	2
	B-8319	Cup - Spring	2	2	2	2	2	2
	F-11089	Cover - Arc Hood	1	1	1	1	1	1
	X-105313	Timer Assem. With Aux. Switch	1	1	1	1	1	1
	X-105312	Timer Only (Pneumatic)	1	1	1	1	1	1
	X-93161	Switch - Auxiliary	1	1	1	1	1	1
	B-14857	Spring	1	1	1	1	1	1
2	*X-106089	2A - Contactor Complete	1	-	1	-	-	-
	*X-105319	2A - Contactor Complete	-	1	-	1	1	1
	RH-4710	Coil	1	-	1	-	-	-
	RH-4712	Coil	-	1	-	-	-	-
	RH-4717	Coil	-	-	-	1	1	1
	X-48393	Block - Stationary Contact	1	-	1	-	-	-
	X-48389	Block - Stationary Contact	-	1	-	1	1	1
	X-42365	Contact - Movable	3	2	3	2	2	2
	B-11133	Spring	3	2	3	2	2	2
	B-8318	Guard - Spring	3	2	3	2	2	2
	B-8319	Cup - Spring	3	2	3	2	2	2
	F-11083	Cover - Arc Hood	1	-	1	-	-	-
	F-11089	Cover - Arc Hood	-	1	-	1	1	1
3	*X-65624	LV1 - Relay Complete	1	1	1	1	1	1
	RY-1905	Coil	1	-	1	-	-	-
	RY-1907	Coil	-	1	-	-	-	-
	RY-1909	Coil	-	-	-	1	1	1
	X-43576	Bar - Cross	1	1	1	1	1	1
	X-68997	Contact - Movable	4	4	4	4	4	4
	X-137704	Contact - Stationary (L.H.)	1	1	1	1	1	1
	X-137705	Contact - Stationary (R.H.)	1	1	1	1	1	1
	E-10802	Spring	4	4	4	4	4	4
4	*X-63899	LV - Relay Complete	1	1	1	1	1	1
	R-4308	Coil - Voltage	1	-	1	-	-	-
	R-4312	Coil - Voltage	-	1	-	-	-	-
	R-4310	Coil - Voltage	-	-	-	1	1	1
	R-4309	Coil - Voltage & Current	1	-	1	-	-	-
	R-4313	Coil - Voltage & Current	-	1	-	-	-	-
	R-4311	Coil - Voltage & Current	-	-	-	1	1	1
	X-63803	Contact	2	2	2	2	2	2
	X-48584	Lever - Contact	1	1	1	1	1	1
5	X-106055	#1 Resistor	1	-	1	-	-	-
	X-106053	#1 Resistor	-	1	-	-	-	-
	X-106054	#1 Resistor	-	-	-	1	1	1
6	X-106061	#2 Resistor	1	-	1	-	-	-
	X-106059	#2 Resistor	-	1	-	-	-	-
	X-106060	#2 Resistor	-	-	-	1	1	1
7	X-106067	#3 Resistor	1	-	1	-	-	-
	X-106065	#3 Resistor	-	1	-	-	-	-
	X-106066	#3 Resistor	-	-	-	1	1	1

* - When ordering these parts specify voltage.

 (Continued on next page)

TYPE "Q" SERIES CONTROL PANELS (Continued)

Illus. No.	Piece No.	Description	EB-80604 QF 36 Volt	EB-80803 QH 126 Volt	EB-80965 QFX 36 Volt	EB-81029 QG 72 Volt	EB-81030 QGX 72 Volt	EB-81428 QGY 72 Volt
*8	X-106037	Resistor Complete - Armature	1	-	-	-	-	-
	X-105316	Resistor Complete - Armature	-	1	-	-	-	-
	X-106091	Resistor Complete - Armature	-	-	1	-	-	-
	X-106038	Resistor Complete - Armature	-	-	-	1	-	1
	X-116546	Resistor Complete - Armature	-	-	-	-	1	-
	G-5810	Resistor Only	1	-	-	-	-	-
	G-5796	Resistor Only	-	1	-	-	-	-
	X-106040	Resistor Only	-	-	1	-	-	-
	G-5811	Resistor Only	-	-	-	1	-	1
	X-106041	Resistor Only	-	-	-	-	1	-
9	X-106079	Resistor - Upper Field (R.H. and L.H.)	2	-	2	-	-	-
	X-106077	Resistor - Upper Field (R.H. and L.H.)	-	2	-	-	-	-
	X-106078	Resistor - Upper Field (R.H. and L.H.)	-	-	-	2	2	2
10	X-106085	Resistor - Lower Field (R.H.)	1	-	1	-	-	-
	X-106083	Resistor - Lower Field (R.H.)	-	1	-	-	-	-
	X-106084	Resistor - Lower Field (R.H.)	-	-	-	1	1	1
11	X-106073	Resistor - Lower Field (L.H.)	1	-	1	-	-	-
	X-106071	Resistor - Lower Field (L.H.)	-	1	-	-	-	-
	X-106072	Resistor - Lower Field (L.H.)	-	-	-	1	1	1

NOTE

The QF panel is the same as the QFX, and the QG is the same as the QGX, except that on the X style panels the armature resistor is mounted separately from the panels.

The QG panel is the same as the QGY panel except that the circuit is not fused on the Y style panel. The protection on the Y style panel is provided by the external circuit breaker.

The QG and QGX panels are identical except for the wiring.

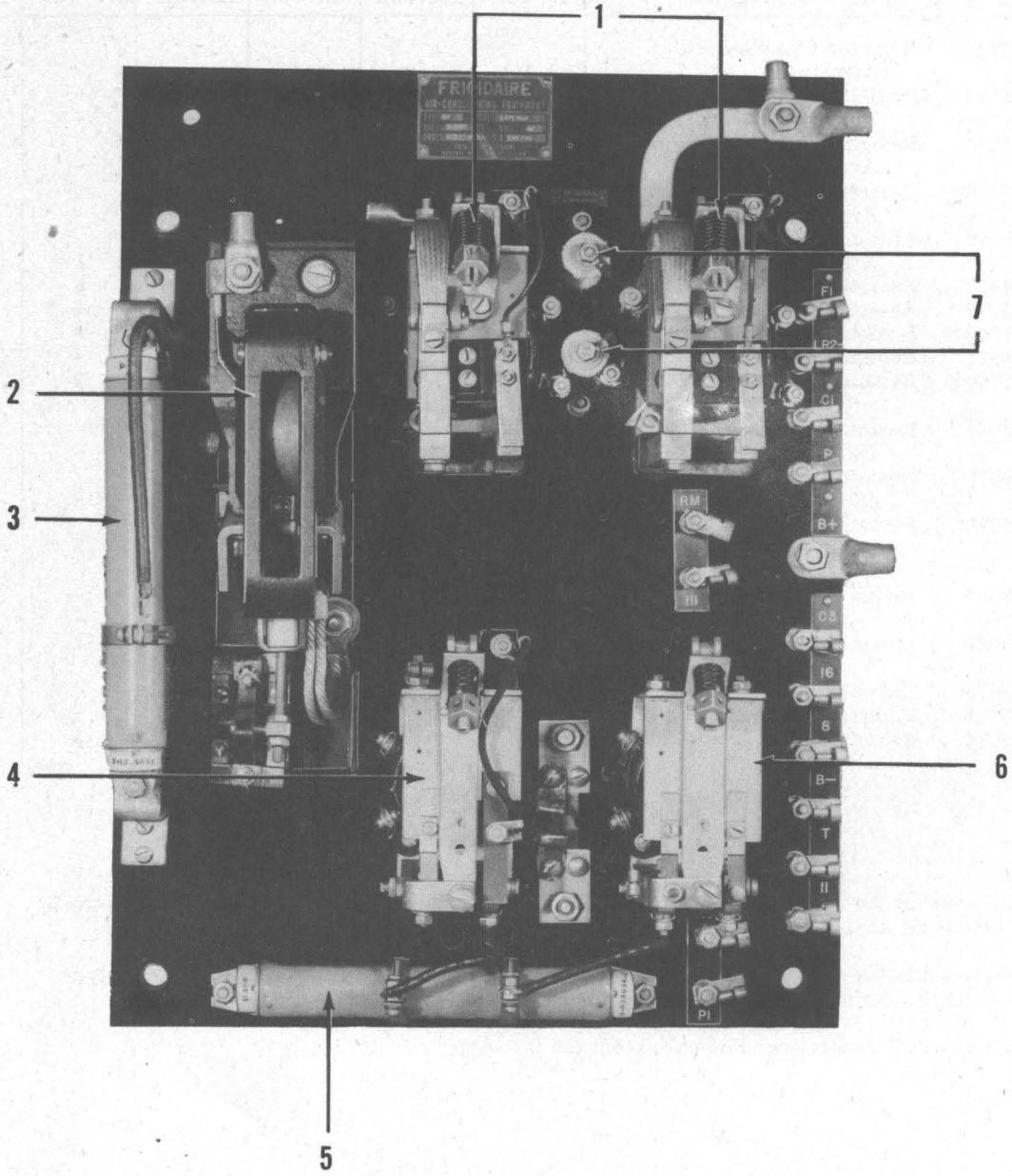

1. Accelerating contactor and parts
2. Line contactor switch complete and parts
3. Shunt field resistor and parts
4. Low voltage relay and parts
5. Adjustable resistor and parts
6. Field forcing modulating relay and parts
7. Neutralizing resistor and parts

"N-2" and "G-2" Control Panel

TYPE "N-2" AND "G-2" CONTROL PANEL
Parts Information

Illus. No.	Piece No.	Description	EB-80630 N-2 Panel	EB-81327 G-2 Panel
1	875627	Contactor - Accelerating	2	-
	875625	Contactor - Accelerating	-	2
	793015	Contact - Main Stationary	2	2
	816937	Contact - Main Moving	2	2
	755077	Contact - Auxiliary Stationary	2	2
	793013	Contact - Auxiliary Moving	2	2
	874138	Coil - Operating	2	-
	874136	Coil - Operating	-	2
2	875606	Switch Complete - Line Contactor	1	-
	875144	Switch Complete - Line Contactor	-	1
	1530722	Contact - Main Stationary	1	1
	178791	Contact - Main Moving	1	1
	875604	Coil - Operating	1	-
	875153	Coil - Operating	-	1
	841361	Interlock Assembly	1	1
	841358	Contact - Stationary	4	4
	1014669	Contact - Moving	2	2
3	1422043	Resistor Assembly - Shunt Field	1	-
	944039	Resistor Assembly - Shunt Field	-	1
	136995	Resistor - Top (7 Ohms)	1	-
	808484	Resistor - Top (19 Ohms)	-	1
	136994	Resistor - Middle (7 Ohms)	1	-
	136993	Resistor - Bottom (7 Ohms)	1	-
	860208	Resistor - Middle and Bottom (9 1/4 Ohms Ea.)	-	2
4	875145	Relay - Low Voltage	1	1
	806276	Contact - Stationary	2	2
	755078	Contact - Moving	2	2
	833931	Support - Stationary Contact	1	1
	830831	Bracket - Stationary Contact	2	2
	587246	Clamp - Moving Contact	2	2
	755082	Holder - Moving Contact	2	2
	569796	Spring - Armature	1	1
	875155	Coil - Operating	1	1
5	825034	Resistor - Adjustable	1	-
	944040	Resistor - Adjustable	-	1
	845474	Clamp - Resistor Mtg.	1	-
	940262	Clamp - Resistor Mtg.	-	1
6	875615	Relay - Field Forcing Modulating	1	-
	875146	Relay - Field Forcing Modulating	-	1
	806276	Contact - Stationary	3	3
	780032	Contact - Moving	2	2
	833931	Support - Stationary Contact	1	1
	1083970	Bracket - Stationary Contact (Long)	1	-
	833932	Bracket - Stationary Contact (Long)	-	1
	830831	Bracket - Stationary Contact (Short)	2	2
	587246	Clamp - Moving Contact	2	2
	970573	Lever - Moving Contact	1	1
	569796	Spring - Armature	1	1
	875603	Coil - Operating	1	-
	875154	Coil - Operating	-	1

(Continued on next page)

TYPE "N-2" AND "G-2" CONTROL PANEL PARTS INFORMATION

Illus. No.	Piece No.	Description	EB-80630 N-2 Panel	EB-81327 G-2 Panel
7	1084002	Resistor Assembly - Neutral	2	2
	1081503	Resistor (200 Ohms)	2	2
		PARTS NOT ILLUSTRATED		
	1184324	Resistor Assembly - Starting	1	-
	1440711	Resistor Assembly - Starting	-	1
	1183680	Resistor (.23 Ohms)	1	-
	943700	Resistor (.644 Ohms)	-	1

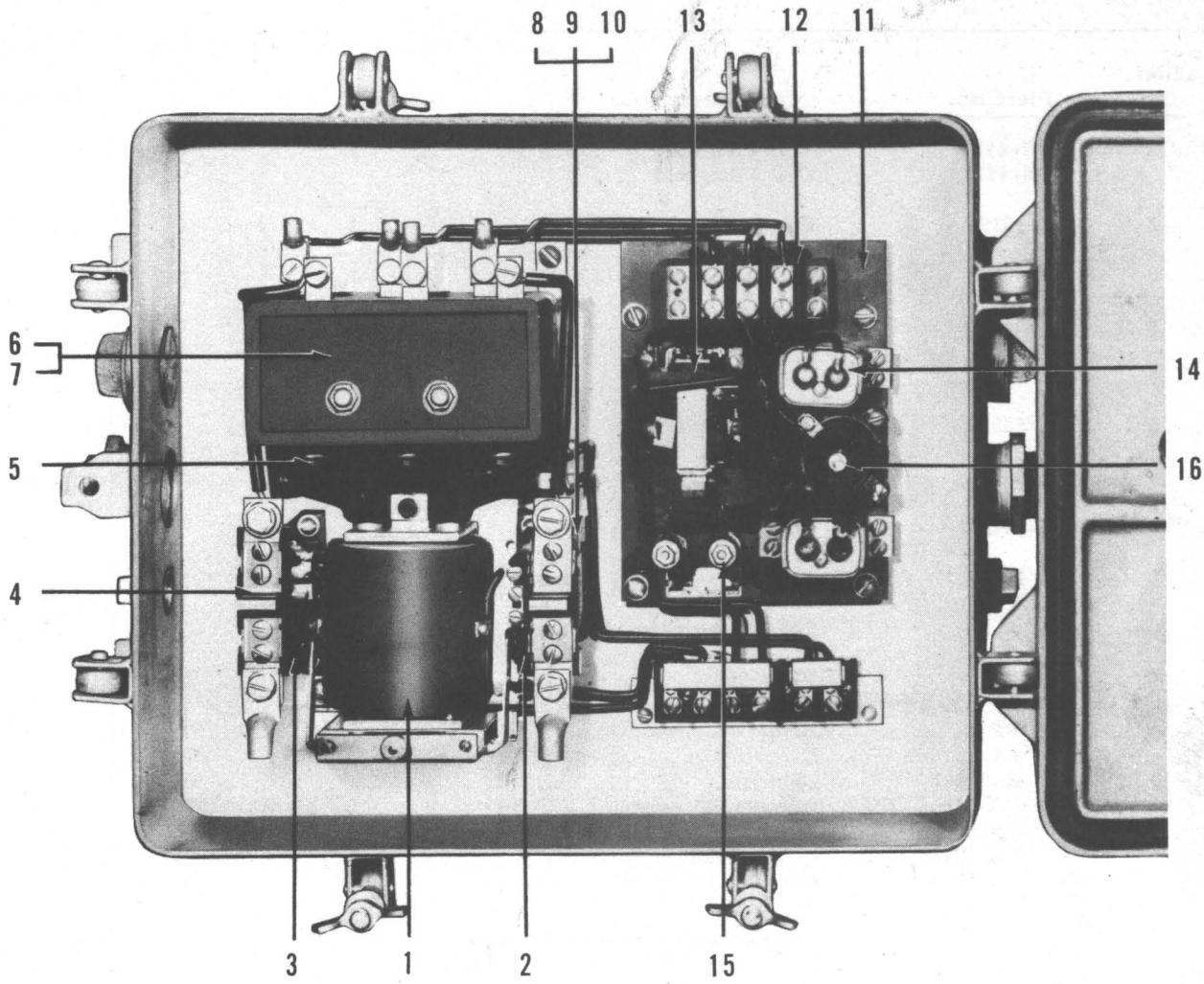

1. Solenoid coil
2. Overload relay (RH)
3. Overload relay (LH)
4. Thermal element
5. Movable contact
6. Contact spring
7. Stationary contacts
8. Auxiliary contact (upper)
9. Auxiliary contact (lower)
10. Auxiliary contact lever
11. PR-2 relay and parts
12. Terminal strip
13. Relay
14. Capacitor
15. Resistor
16. Lamp receptacle and parts

"PA" and "PC" Starter Panel

TYPE "PA" AND "PC" STARTER PANEL (AC)
Parts Information

Illus. No.	Piece No.	Description	EB-81275 PA Without Case	EB-81693 PA With Case	EB-81328 PC With Case
1	RH-4714	Coil - Solenoid	1	1	-
	RH-4711	Coil - Solenoid	-	-	1
2	X-40196	Relay - Overload (R.H.)	1	1	1
3	X-40190	Relay - Overload (L.H.)	1	1	1
4	Type - N	Thermal Element	2	2	2
5	X-36670	Contact - Movable	3	3	3
6	E-5356	Spring - Contact	3	3	3
7	X-36702	Contact - Stationary	6	6	6
8	X-40296	Contact - Auxiliary (Upper)	1	1	1
9	X-40297	Contact - Auxiliary (Lower)	1	1	1
10	X-42560	Lever - Auxiliary Contact	1	1	1
11	EM-14805	PR-2 Relay Complete	1	1	1
12	EA-128016	Strip - Terminal	1	1	1
13	EB-81020	Relay - Solenoid	1	1	1
14	EA-127607	Capacitor	2	2	2
15	EA-127609	Resistor	2	2	2
16	EA-61658	Receptacle - Lamp	1	1	1
	EA-61660	Lamp - Neon Glow	1	1	1
	EA-29432	Lens - Neon	1	1	1
	EA-29435	Gasket - Lens Mtg.	1	1	1

TYPE CF, CF-2 CONTACTOR
Parts Information

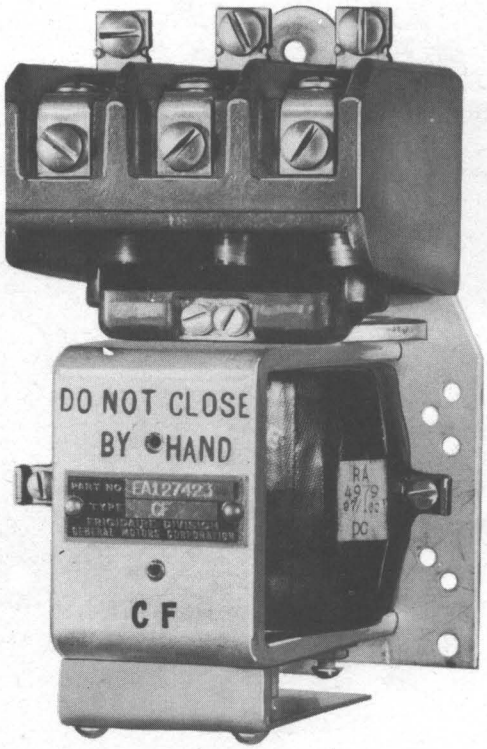

Typical CF Contactor

Piece No.	Description	EA-127423 CF Contactor	EA-128183 CF Contactor	EA-128364 CF-2 Contactor	EA-140146 CF Contactor
X-49654	Block Assembly - Contact (3 Pole)	1	-	-	-
X-108908	Block Assembly - Contact (2 Pole)	-	1	1	1
X-33519	Contact (Front)	3	2	2	2
X-35163	Contact (Rear)	3	2	2	2
F-11610	Block - Contact	1	-	-	-
F-14886	Block - Contact	-	1	1	1
G-4488	Terminal - Front	3	2	2	2
G-3848	Terminal - Rear	3	2	2	2
X-33552	Contact	3	2	2	2
B-7615	Spring - Contact	3	2	2	2
X-32836	Bar - Cross	1	-	-	-
X-45125	Bar - Cross	-	1	1	1
X-75676	Core	1	1	1	1
X-75677	Plunger	1	1	1	1
Z-4914	Guard - Plunger	1	1	1	1
RA-4979	Coil	1	1	-	-
RA-4985	Coil	-	-	1	-
RA-4969	Coil	-	-	-	1

TYPE K, K-2 AUXILIARY RELAY

Parts Information

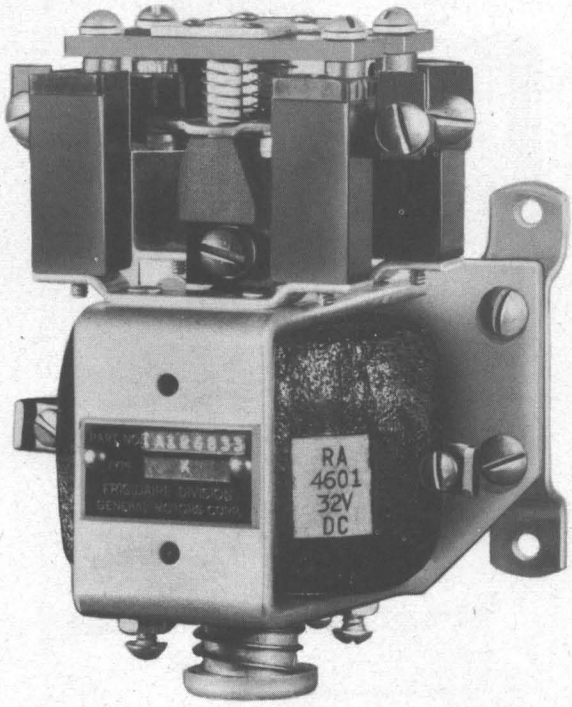

Typical K Auxiliary Relay

Piece No.	Description	EA-126833 K Relay	Piece No.	Description	EA-128602 K-2 Relay	EA-140145 K-2 Relay
X-68998	Contact (L.H.)	2	X-48706	Block - Contact (L.H.)	1	-
X-68999	Contact (R.H.)	2	X-137730	Block - Contact (L.H.)	-	1
B-10803	Spring - Guide	1	X-48707	Block - Contact (R.H.)	1	-
F-14778	Bar - Cross	1	X-137731	Block - Contact (R.H.)	-	1
X-68996	Contact	2	X-44840	Bar - Cross	1	1
B-11806	Spring - Core	1	X-52864	Core	1	1
G-5152	Connector - Block	2	X-68996	Contact	3	3
X-52864	Core	1	B-11234	Spring - Core	1	1
RA-4601	Coil	1	RA-4601	Coil	1	-
			RA-4602	Coil	-	1

TYPE P-RELAY

Piece No.	Description	EA-128282 P Relay
X-105212	Plunger	1
X-75676	Core	1
X-33552	Contact	2
X-52550	Terminal (NC)	2
X-52549	Terminal (NO)	2
X-33480	Bar - Cross	1
B-7615	Spring	2
E-12154	Guide - Spring	1
F-10729	Bar - Cross	1
RA-4979	Coil	1

TYPE CFR RESISTOR
Parts Information

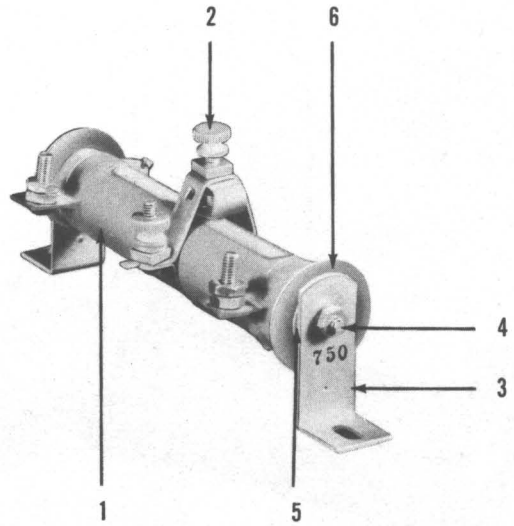

1. Resistor
2. Adjustable band
3. Bracket
4. Through bolt
5. Centering washer
6. Mica washer

Typical CFR Resistor

Illus. No.	Piece No.	Description	EC-17676 72 Volt	EC-17686 36 Volt	EC-18038 126 Volt	EC-18788 126 Volt
1	K-42223-1	Resistor - 5 in. WX, 75 Watt, 100 Ohms, Bare Side (Type 229 Terminals)	1	-	-	-
	K-42224-1	Resistor - 5 in. WX, 75 Watt, 25 Ohms, Bare Side (Type 229 Terminals)	-	1	-	-
	K-42225-1	Resistor - 5 in. WX, 75 Watt, 750 Ohms, Bare Side (Type 229 Terminals)	-	-	1	-
	K-42226-1	Resistor - 5 in. WX, 75 Watt, 750 Ohms, Bare Side (Type 229 Terminals)	-	-	-	1
2	K-42223-2	Band - Adjustable (Spec. Type 603) (Dwg. 11216.2-9)	1	-	-	-
	K-42224-2	Band - Adjustable (Spec. Type 603) (Dwg. 11216.2-9)	-	1	-	-
	K-42225-2	Band - Adjustable (Spec. Type 603) (Dwg. 11216.2-9)	-	-	1	-
	K-42226-2	Band - Adjustable (Spec. Type 603) (Dwg. 11216.2-9)	-	-	-	2
3	K-42223-3	Bracket - Mounting (Dwg. 25170.6-3)	2	-	-	-
	K-42224-3	Bracket - Mounting (Dwg. 25170.6-3)	-	2	-	-
	K-42225-3	Bracket - Mounting (Dwg. 25170.6-3)	-	-	2	-
	K-42226-3	Bracket - Mounting (Dwg. 25170.6-3)	-	-	-	2
4	K-42223-4	Bolt - Through (Dwg. 1.10-44)	1	-	-	-
	K-42224-4	Bolt - Through (Dwg. 1.10-44)	-	1	-	-
	K-42225-4	Bolt - Through (Dwg. 1.10-44)	-	-	1	-
	K-42226-4	Bolt - Through (Dwg. 1.10-44)	-	-	-	1
5	K-42223-5	Washer - Centering (Dwg. 2515.13-8)	1	-	-	-
	K-42224-5	Washer - Centering (Dwg. 2515.13-8)	-	1	-	-
	K-42225-5	Washer - Centering (Dwg. 2515.13-8)	-	-	1	-
	K-42226-5	Washer - Centering (Dwg. 2515.13-8)	-	-	-	1
6	K-42223-6	Washer - Mica (Dwg. 2.6-6)	1	-	-	-
	K-42224-6	Washer - Mica (Dwg. 2.6-6)	-	1	-	-
	K-42225-6	Washer - Mica (Dwg. 2.6-6)	-	-	1	-
	K-42226-6	Washer - Mica (Dwg. 2.6-6)	-	-	-	1

TYPE CFLR RESISTOR
Parts Information

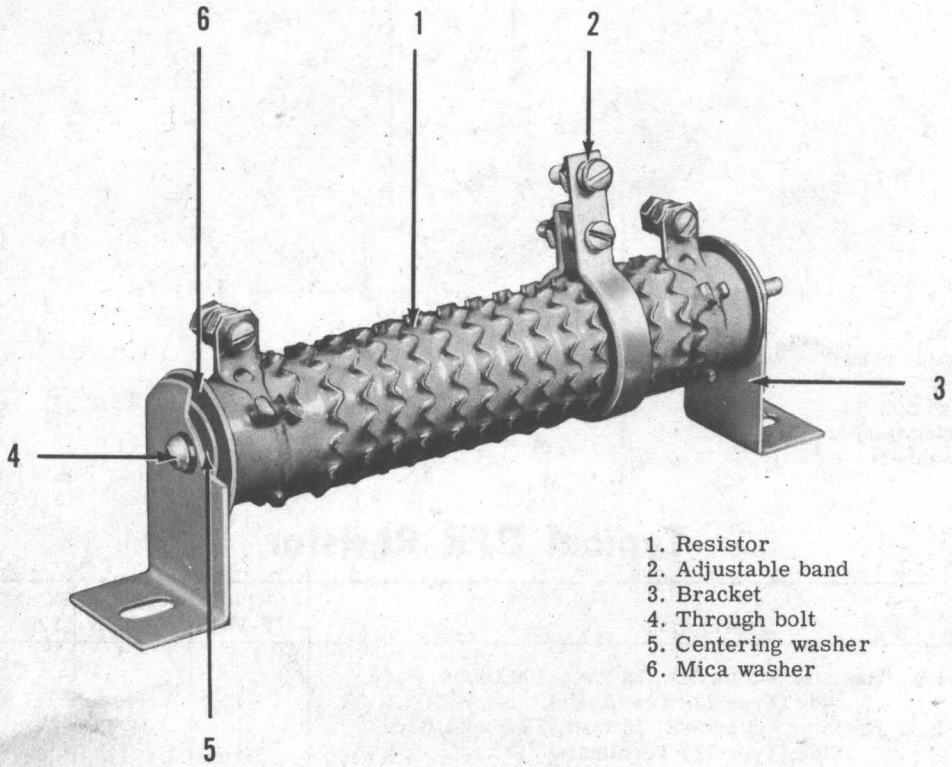

1. Resistor
2. Adjustable band
3. Bracket
4. Through bolt
5. Centering washer
6. Mica washer

CFLR Resistor

Illus. No.	Piece No.	Description	EC-18467 72 Volt
1	K-42222-1	Resistor - 6 1/8 in. D, 1 Ohm Ribflex, Bare Side, Terminal (Dwg. 25226.1)	1
2	K-42222-2	Band - Adjustable (Dwg. 25104.7-6)	1
3	K-42222-3	Bracket - Mounting (Dwg. 25170.6-5)	1
4	K-42222-4	Bolt - Through (Dwg. 1.11-54)	1
5	K-42222-5	Washer - Centering (Dwg. 25151.13-9)	1
6	K-42222-6	Washer - Mica (Dwg. 2.6-27)	1